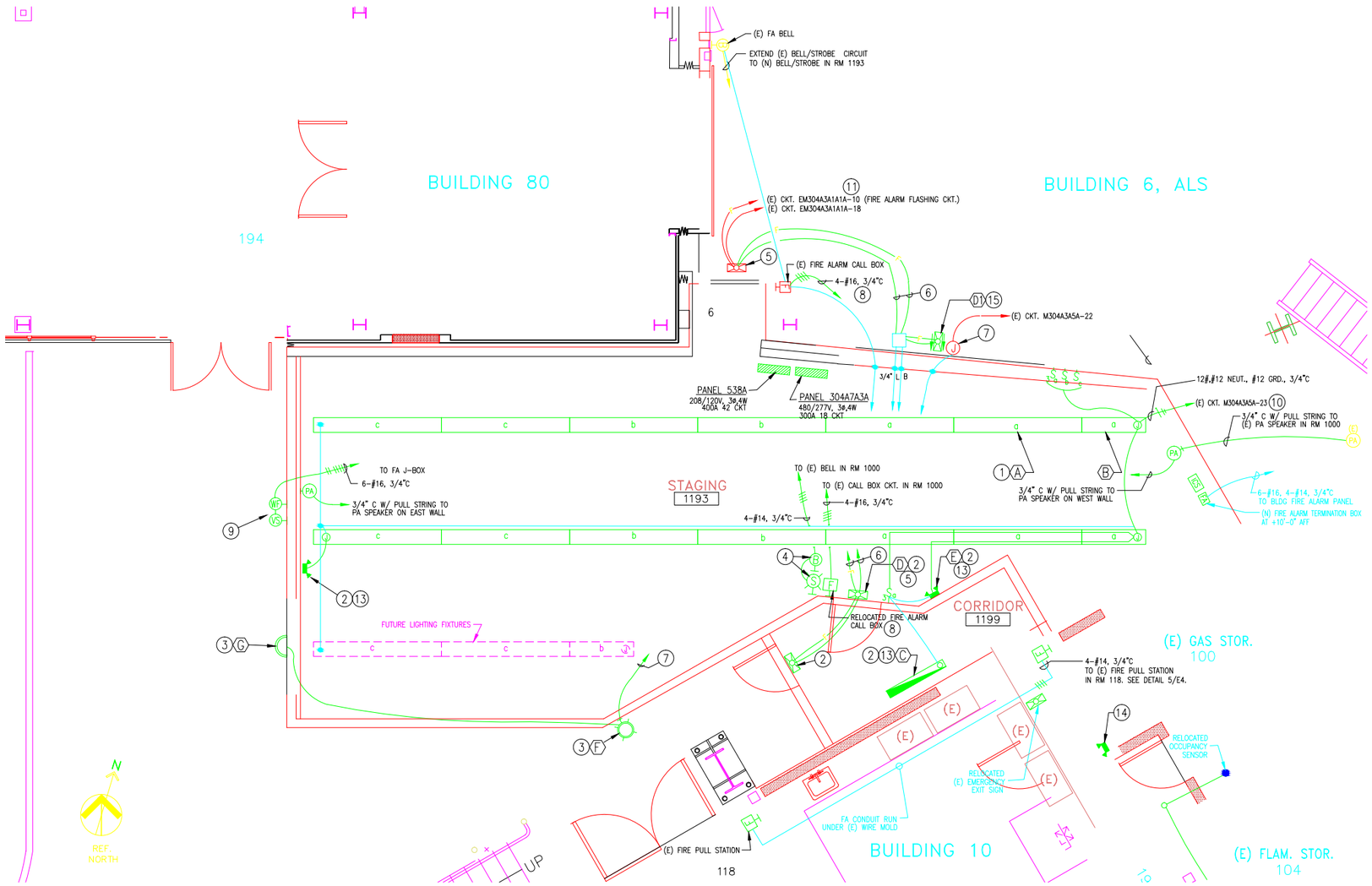

LIGHTING, PA & FIRE ALARM PLAN

0 2 4 8FT

SHEET NOTES:

1. BOTTOM OF FIXTURES TO BE AT 12'-0" AFF.
2. FIXTURE MOUNTED ON WALL AND CENTERED AT +96" AFF.
3. FIXTURE MOUNTED WITH BOTTOM AT +11'-0" AFF.
4. MOUNT FA BELL AT +96" AFF, CENTERED. MOUNT STROBE LIGHT AT +80" AFF TO BOTTOM OF LIGHT.
5. RELOCATE (E) EXIT SIGN FROM (E) RM 1000 DOOR TO (N) RM 1193 DOOR.
6. EXTEND (E) POWER CKT. EM304A3A1A1A-18 AND FIRE ALARM FLASHING CKT. EM304A3A1A1A-1 TO THE (R) AND (N) EXIT SIGNS.
7. EXTEND (E) LIGHTING CKT. E304A3A5A-22 TO (N) AND (R) OUTDOOR LIGHT FIXTURES..
8. RELOCATE (E) FIRE ALARM CALL BOX AND EXTEND FIRE ALARM CIRCUIT TO (N) LOCATION.
9. FIRE SPRINKLER FLOW SWITCH & TAMPER SWITCH AND VALVE SUPERVISION SWITCH INSTALLED UNDER DIVISION 15, WIRED UNDER DIVISION 16.
10. PNL M304A3A5A LOCATED IN RM 1000, SOUTH WALL, NEAR COL. LINE 2.
11. PNL EM304A3A1A1A LOCATED IN RM 1000, SOUTH WALL, NEAR COL. LINE 1.
12. FIRE ALARM PANELS LOCATED IN RM 1998 (EAST BLDG. LOBBY) NEAR COL. LINE 3.
13. FIXTURE ON UNSWITCHED LEG OF CIRCUIT.
14. RELOCATED (E) EMERG. LIGHTING UNIT TO CLEAR NEW DOOR. SEE E1.
15. FIXTURE MOUNTED ON WALL TO CLEAR OPENING.

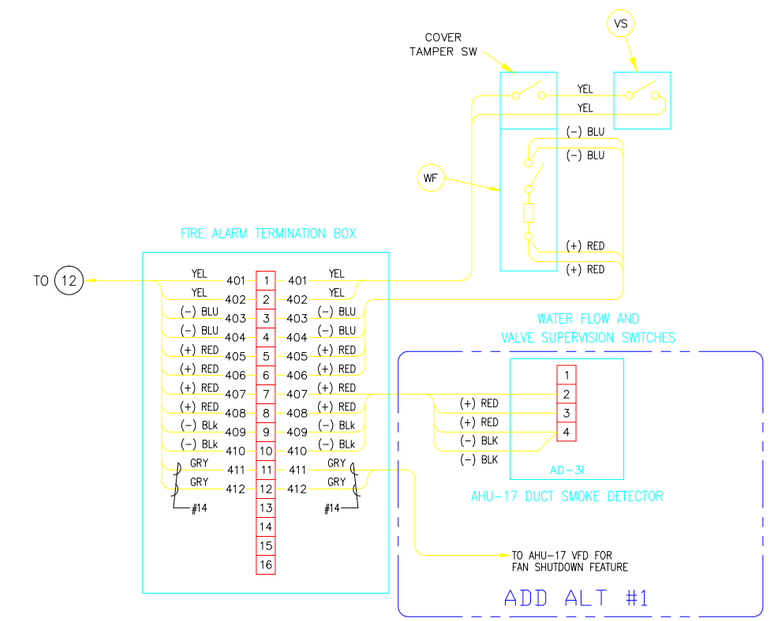

1/E4 WIRING DIAGRAM (N) FIRE ALARM CIRCUITS

ALL WIRING #16 U.O.N.

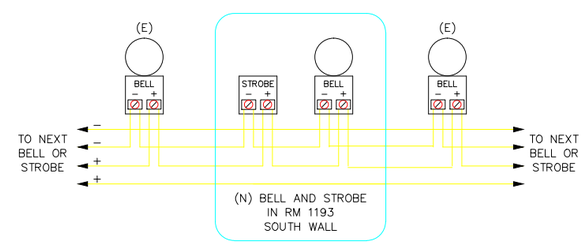

2/E4 STROBE & BELL CKT. MODS

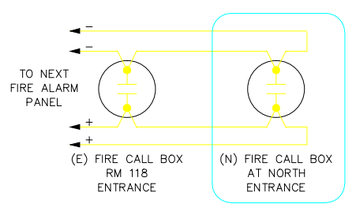

4/E4 FIRE CALL BOX CKT. MODS

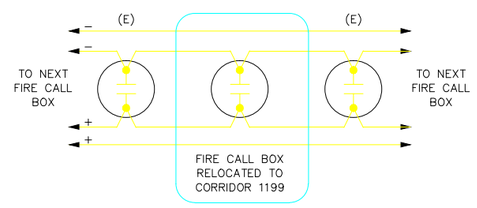

3/E4 FIRE CALL BOX CKT. MODS

		A	MRC	LDD	MCG	2/12/03	AS-BUILT
PROFESSIONAL SEAL (IF REVISION APPLIES ONLY TO REVISED WORK)	AS-BUILT 2/12/2003	REVISION NUMBER	DRAWN BY	CHECKED BY	APPR'D BY	DATE	REMARKS

ISSUE (PROGRESS, ESTIMATE, BID, CONSTRUCTION, CONFORMED, REVISION, AS-BUILT)

06 SC#818

SECTOR 4 ADDITION

LIGHTING, PA & FIRE ALARM PLAN

UNIVERSITY OF CALIFORNIA
LAWRENCE BERKELEY NATIONAL LABORATORY
FACILITIES DEPARTMENT

DRAWN BY LDD	DATE 12/14/20	
CHECKED BY MCG	12/14/20	
APPROVED BY MCG	12/14/20	
CAD FILE PATH 00015614		
SCALE As Noted		
DRAWING NO. 4B06E281A	SHEET E4	
PROJECT NO. FX1044		