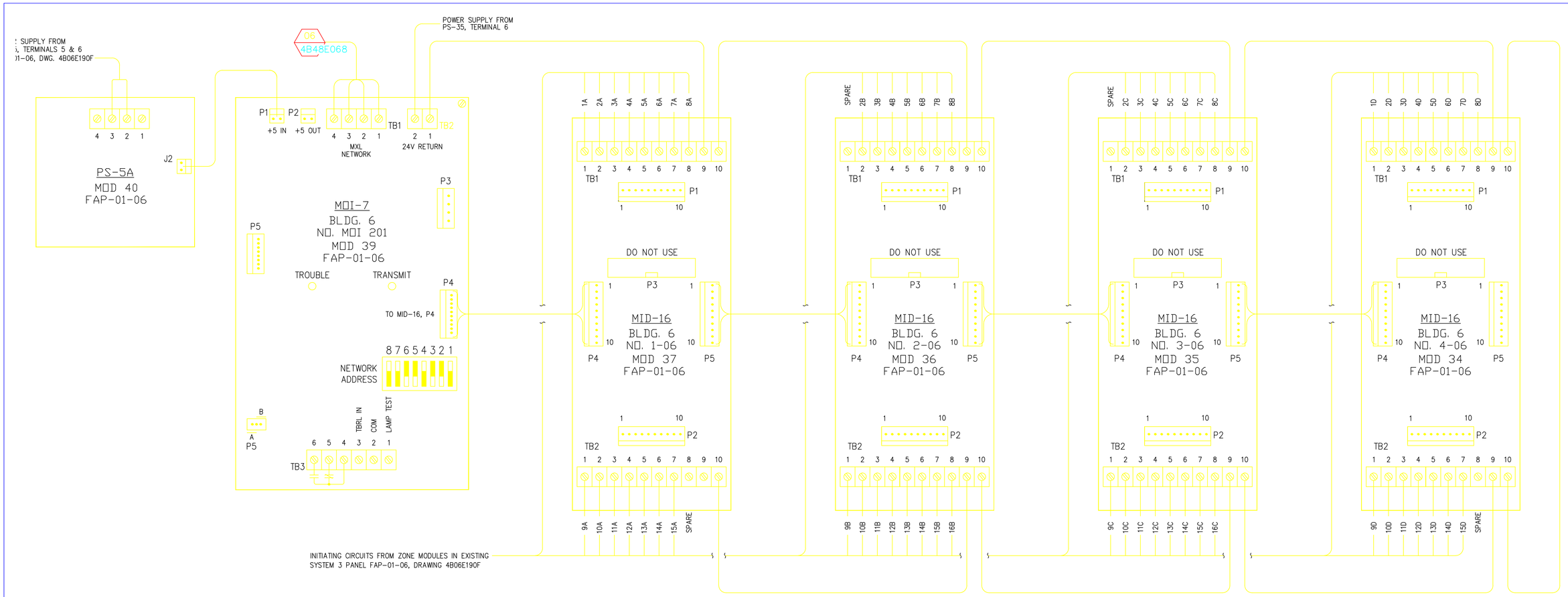

OLD ADDRESS	DESCRIPTION	MID-16 TERMINATION	MODULE TYPE & NO.	MXL NO. 04-02 ADDRESS
2F34	SYSTEM 3 FACP TROUBLE	TB. 1 NO. 1	MID-16 NO. 1-06	4-201-1
2F35	SECTOR 4 (RM 1193) WF	TB. 1 NO. 2	MID-16 NO. 1-06	4-201-2
2F36	SPARE	TB. 1 NO. 3	MID-16 NO. 1-06	4-201-3
2F37	MAIN RISER WF	TB. 1 NO. 4	MID-16 NO. 1-06	4-201-4
2F38	DOME ZONE 1 WF	TB. 1 NO. 5	MID-16 NO. 1-06	4-201-5
2F39	N HIBAY L MEZZ Z2 WF	TB. 1 NO. 6	MID-16 NO. 1-06	4-201-6
2F40	E HIBAY L MEZZ Z3 WF	TB. 1 NO. 7	MID-16 NO. 1-06	4-201-7
2F41	S HIBAY L MEZZ Z4 WF	TB. 1 NO. 8	MID-16 NO. 1-06	4-201-8
2F42	N UPPER MEZZ Z5 WF	TB. 2 NO. 1	MID-16 NO. 1-06	4-201-9
2F43	E UPPER MEZZ Z6 WF	TB. 2 NO. 2	MID-16 NO. 1-06	4-201-10
2F44	S UPPER MEZZ Z7 WF	TB. 2 NO. 3	MID-16 NO. 1-06	4-201-11
2F45	TUNNEL & STOR RING Z8 WF	TB. 2 NO. 4	MID-16 NO. 1-06	4-201-12
2F46	BOOSTER RING Z9 WF	TB. 2 NO. 5	MID-16 NO. 1-06	4-201-13
2F47	DSD AHU-16	TB. 2 NO. 6	MID-16 NO. 1-06	4-201-14
2F48	DSD AHU-15	TB. 2 NO. 7	MID-16 NO. 1-06	4-201-15
N/A	FUTURE/SPARE	N/A	N/A	N/A

OLD ADDRESS	DESCRIPTION	MID-16 TERMINATION	MODULE TYPE & NO.	MXL NO. 04-02 ADDRESS
2F50	FUTURE/SPARE	N/A	N/A	N/A
2F51	FCB (1) INJECTOR	TB. 1 NO. 2	MID-16 NO. 2-06	4-201-18
2F52	FCB (2) BOOSTER RING	TB. 1 NO. 3	MID-16 NO. 2-06	4-201-19
2F53	FCB (1) STOR RING & STAIR	TB. 1 NO. 4	MID-16 NO. 2-06	4-201-20
2F54	FCB (4) STOR RING WEST	TB. 1 NO. 5	MID-16 NO. 2-06	4-201-21
2F55	FCB (2) STOR RING NORTHEAST	TB. 1 NO. 6	MID-16 NO. 2-06	4-201-22
2F56	FCB (4) STOR RING SOUTHEAST	TB. 1 NO. 7	MID-16 NO. 2-06	4-201-23
2F57	FCB 2ND FLOOR BOILER ROOM	TB. 1 NO. 8	MID-16 NO. 2-06	4-201-24
2F58	FCB 2ND FLOOR NORTHEAST	TB. 2 NO. 1	MID-16 NO. 2-06	4-201-25
2F59	MPS 2ND FLR EAST	TB. 2 NO. 2	MID-16 NO. 2-06	4-201-26
2F60	HSSD LEVEL 3 ALARM	TB. 2 NO. 3	MID-16 NO. 2-06	4-201-27
2F61	SPARE	TB. 2 NO. 4	MID-16 NO. 2-06	4-201-28
2F62	SPARE	TB. 2 NO. 5	MID-16 NO. 2-06	4-201-29
2F63	HSSD TROUBLE/SUPERVISION	TB. 2 NO. 6	MID-16 NO. 2-06	4-201-30
2F64	SD 2ND FLOOR HALL 1993	TB. 2 NO. 7	MID-16 NO. 2-06	4-201-31
2F66	SD FAP	TB. 2 NO. 8	MID-16 NO. 2-06	4-201-32

OLD ADDRESS	DESCRIPTION	MID-16 TERMINATION	MODULE TYPE & NO.	MXL NO. 04-02 ADDRESS
2F67	FUTURE/SPARE	N/A	N/A	N/A
2F68	DUCT DET BOOSTER BL-19	TB. 1 NO. 2	MID-16 NO. 3-06	4-201-34
2F69	DUCT DET BOOSTER BL-18	TB. 1 NO. 3	MID-16 NO. 3-06	4-201-35
2F70	DUCT DET STOR RING BL-16	TB. 1 NO. 4	MID-16 NO. 3-06	4-201-36
2F71	DUCT DET STOR RING BL-20	TB. 1 NO. 5	MID-16 NO. 3-06	4-201-37
2F72	DUCT DET STOR RING BL-17	TB. 1 NO. 6	MID-16 NO. 3-06	4-201-38
2F73	DUCT DET AHU2 ROOF	TB. 1 NO. 7	MID-16 NO. 3-06	4-201-39
2F74	DUCT DET AHU3 ROOF	TB. 1 NO. 8	MID-16 NO. 3-06	4-201-40
2F75	DUCT DET AHU4 ROOF	TB. 2 NO. 1	MID-16 NO. 3-06	4-201-41
2F76	DUCT DET MEZZ CLNG BL-21	TB. 2 NO. 2	MID-16 NO. 3-06	4-201-42
2F77	EL-01-06 RECALL	TB. 2 NO. 3	MID-16 NO. 3-06	4-201-43
2F78	SD 2ND FLOOR NE	TB. 2 NO. 4	MID-16 NO. 3-06	4-201-44
2F78	SD ROOM 2105A	TB. 2 NO. 5	MID-16 NO. 3-06	4-201-45
2F79	SD MEZANNINE	TB. 2 NO. 6	MID-16 NO. 3-06	4-201-46
N/A	FUTURE/SPARE	TB. 2 NO. 7	MID-16 NO. 3-06	4-201-47
2F80	SD STOR RING ENTRANCE	TB. 2 NO. 8	MID-16 NO. 3-06	4-201-48

OLD ADDRESS	DESCRIPTION	MID-16 TERMINATION	MODULE TYPE & NO.	MXL NO. 04-02 ADDRESS
2F82	SECTOR 4 (RM 1193) ISOL VLV	TB. 1 NO. 2	MID-16 NO. 4-06	4-201-49
2F83	MAIN RISER OS&Y TAMPER SW	TB. 1 NO. 2	MID-16 NO. 4-06	4-201-50
2F84	DOME ZONE 1 ISOL VALVE	TB. 1 NO. 3	MID-16 NO. 4-06	4-201-51
2F85	N HIBAY L MEZZ Z2 ISOL VALVE	TB. 1 NO. 4	MID-16 NO. 4-06	4-201-52
2F86	E HIBAY L MEZZ Z3 ISOL VALVE	TB. 1 NO. 5	MID-16 NO. 4-06	4-201-53
2F87	S HIBAY L MEZZ Z4 ISOL VALVE	TB. 1 NO. 6	MID-16 NO. 4-06	4-201-54
2F88	N UPPER MEZZ Z5 ISOL VALVE	TB. 1 NO. 7	MID-16 NO. 4-06	4-201-55
2F89	E UPPER MEZZ Z6 ISOL VALVE	TB. 1 NO. 8	MID-16 NO. 4-06	4-201-56
2F90	S UPPER MEZZ Z7 ISOL VALVE	TB. 2 NO. 1	MID-16 NO. 4-06	4-201-57
2F91	TUNL,BOSTR,STOR Z 8/9 ISO VLV	TB. 2 NO. 2	MID-16 NO. 4-06	4-201-58
2F92	TUNL,STOR Z8 SECT VALVE	TB. 2 NO. 3	MID-16 NO. 4-06	4-201-59
2F93	BOOSTER Z9 SECT VALVE	TB. 2 NO. 4	MID-16 NO. 4-06	4-201-60
2F94	DUCT DET AHU-5-06 NW MEZZ	TB. 2 NO. 5	MID-16 NO. 4-06	4-201-61
2F95	SD NW MEZZ, CORR, EL1 LOBBY	TB. 2 NO. 6	MID-16 NO. 4-06	4-201-62
2F96	FCB NW MEZZ	TB. 2 NO. 7	MID-16 NO. 4-06	4-201-63
N/A	FUTURE/SPARE	N/A	N/A	N/A

AS BUILT

F
4/24/2013

REVISION NUMBER	DRAWN BY	CHECKED BY	APPR'D BY	DATE	REMARKS
F	LD	LDD	MCD	04/24/13	AS BUILT PER FIELD VERIFICATIONS
E	AD	LDD	MCD	03/21/06	REVISED FOR MXL COPPER LOOP
D	AD	MCG	MCG	04/06/05	REVISED FOR DIGITIZED SYSTEM
C	AD	MCG	MCG	09/19/03	AS-BUILT, FIRE ALARM PHASE I UPGRADE
B	LDD	MCG	MCG	12/12/02	SECTOR 4 ADDITION - PROJ FX1044
A	HYT	HYT		05/23/02	SOUTH EXPANSION

PROFESSIONAL SEAL (IF REVISION, APPLIES ONLY TO REVISED WORK)

ISSUE (PROGRESS, ESTIMATE, BID, CONSTRUCTION, CONFORMED, REVISION, RECORD)

06 BUILDING 6

REPLACEMENT FIRE ALARM SYSTEM

MOI/MID MODULE ARRANGEMENT

UNIVERSITY OF CALIFORNIA
LAWRENCE BERKELEY NATIONAL LABORATORY
FACILITIES DIVISION

		DATE
DRAWN BY	AD	3/21/2006
CHECKED BY	AD	3/21/2006
APPROVED BY	LDD	3/21/2006
CAD FILE PATH		
SCALE	Full	
DRAWING NO.	4B06E274F	
PROJECT NO.	120960	
SHEET	1 OF 1	