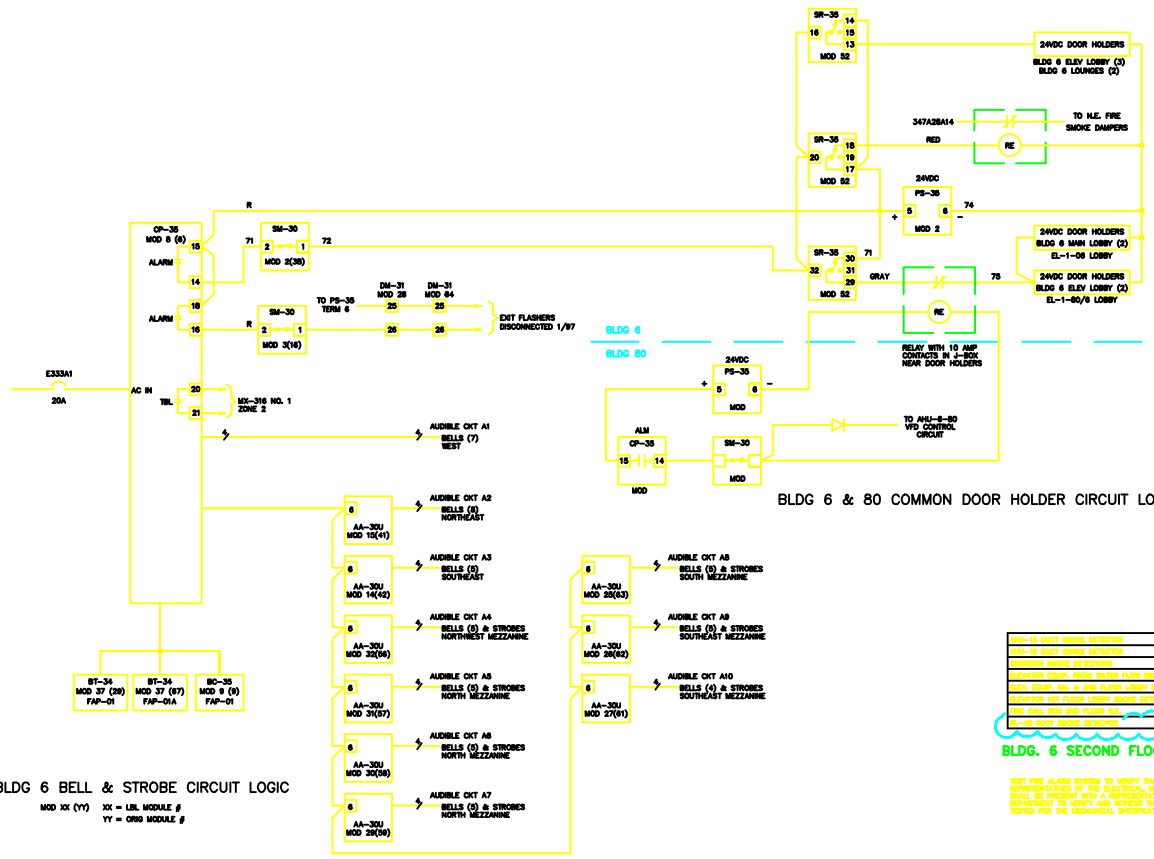

BLDG 6 & 80 COMMON DOOR HOLDER CIRCUIT LOGIC

BLDG 6 BELL & STROBE CIRCUIT LOGIC

MOD XX (YY) XX = LBL MODULE #
YY = ORIG MODULE #

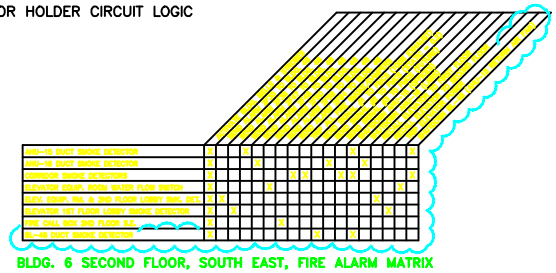

BLDG. 6 SECOND FLOOR, SOUTH EAST, FIRE ALARM MATRIX

TEST FIRE ALARM SYSTEM TO VERIFY THAT IT FUNCTIONS ACCORDING TO THE FIRE ALARM MATRIX. REPRESENTATIVES OF THE ELECTRICAL, MECHANICAL, FMCS, ELEVATOR AND PLUMBING SUBCONTRACTORS SHALL BE PRESENT WITH A REPRESENTATIVE OF THE LBNL PROJECT MANAGER AND THE LBNL FIRE DEPARTMENT TO VERIFY AND WITNESS THE TESTS. THE FMCS RESPONSE TO SIGNALS 1, 2 & 3 SHALL BE TESTED PER THE MECHANICAL SPECIFICATION 15995.

NOTE: THIS DRAWING WAS 4B06E173

GENERAL NOTES

CONTRACTOR IN CONSTRUCTING INDIVIDUAL BID SCOPE OF WORK SHALL CONSIDER AND MAKE PROVISIONS FOR FUTURE CONSTRUCTION.

Eichleay
Engineers Inc. of California
1390 Willow Pass Road, Suite 600, Concord, Ca. 94520
(925) 689-7000 * FAX (925) 689-7006

REV	DATE	DRAWN	CHKD	APVD	DESCRIPTION
A					04/06 RE-BUILT RECORD DWG PER CHRIS, BARBARA

BUILDING 6
OFFICE & LAB BUILD-OUT
FIRE ALARM LOGIC DIAGRAM #3

UNIVERSITY OF CALIFORNIA LAWRENCE BERKELEY LABORATORY
FACILITIES DEPARTMENT

DRAWN BY DAS
DATE 11/19/99
APPROVED BY
CAD FILE NAME 00013992
SCALE NONE
DRAWING NO. 4B06E256A
SHEET E94
PROJECT NO. F00010