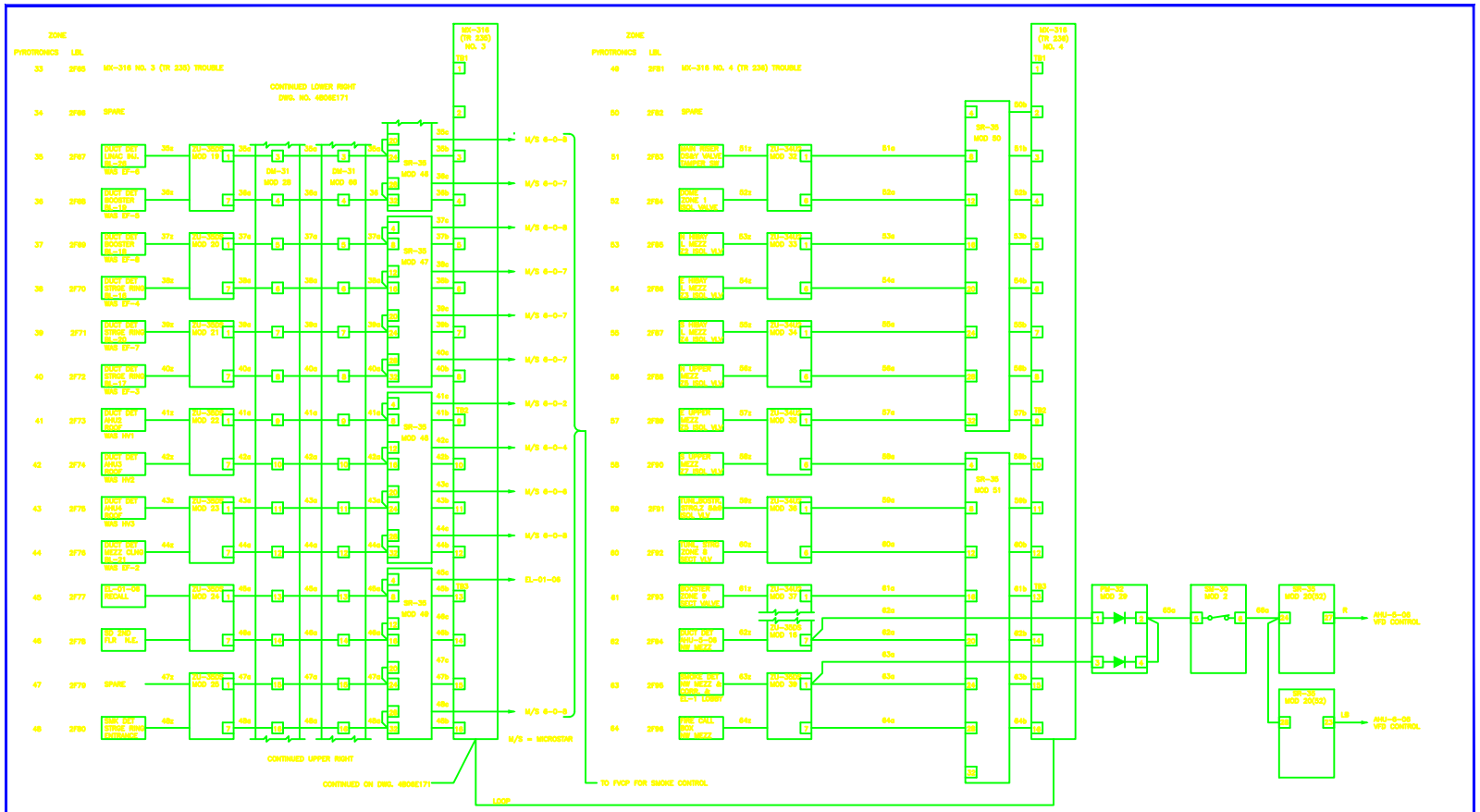

NOTE: THIS DRAWING WAS 4B06E172

GENERAL NOTES

CONTRACTOR IN CONSTRUCTING INDIVIDUAL BID SCOPE OF WORK SHALL CONSIDER AND MAKE PROVISIONS FOR FUTURE CONSTRUCTION.

Eichleay Engineers Inc. of California
1390 Willow Pass Road, Suite 600, Concord, Ca. 94520
(925) 689-7000 * FAX (925) 689-7006

REVISIONS					
A					AS-BUILT RECORD DWG PER CONST. MANUFR

BUILDING 6
OFFICE & LAB BUILD-OUT
FIRE ALARM LOGIC DIAGRAM #2

UNIVERSITY OF CALIFORNIA LAWRENCE BERKELEY LABORATORY
FACILITIES DEPARTMENT

DRAWN BY	DAS	DATE 11/19/98
CHECKED BY		
APPROVED BY		
CAD FILE PATH	00013201	
SCALE	NONE	
DRAWING NO.	4B06E255A	SHEET E93
PROJECT NO.	FM9510	