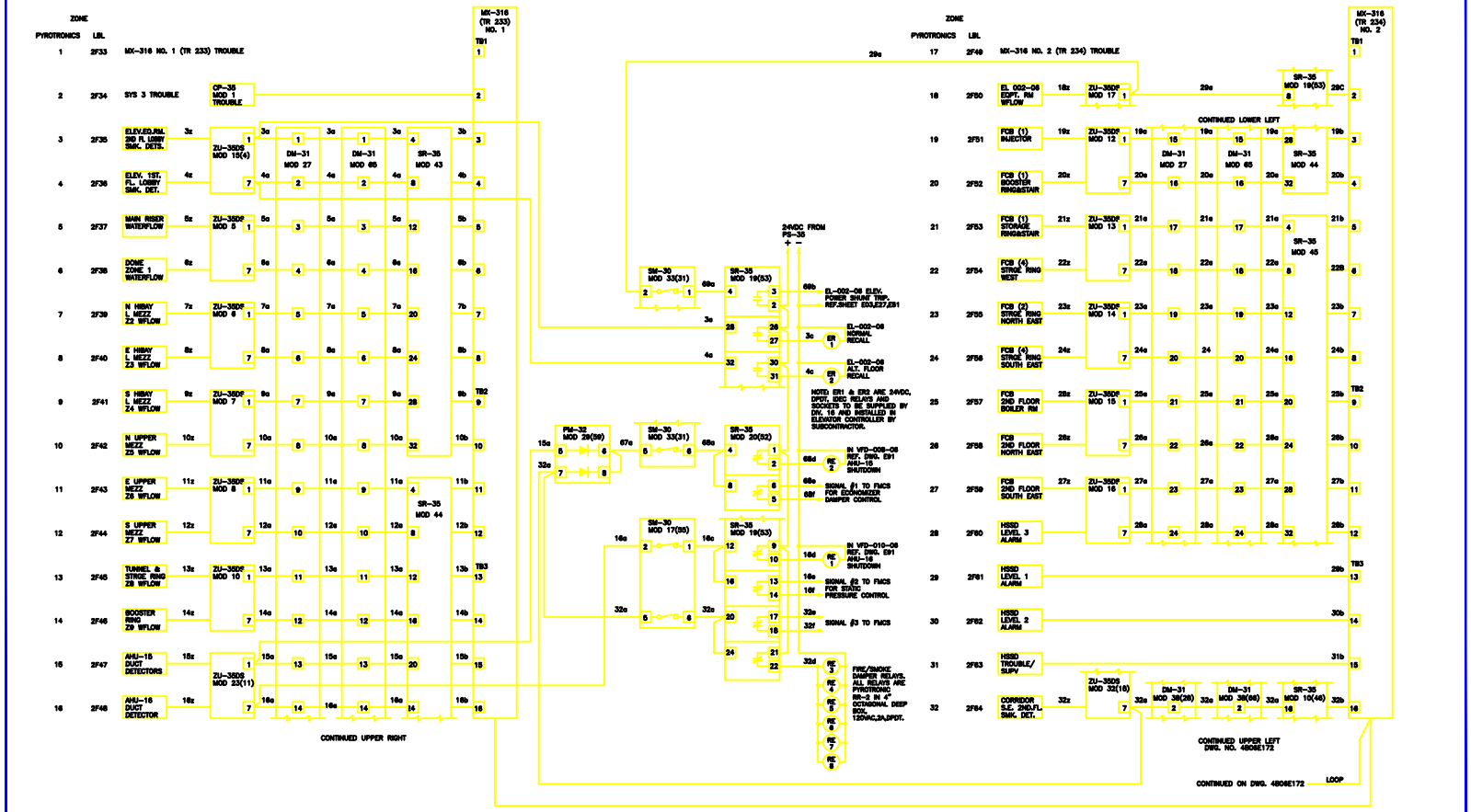

NOTE: THIS DRAWING WAS 4B06E171

GENERAL NOTES

CONTRACTOR IN CONSTRUCTING INDIVIDUAL BID SCOPE OF WORK SHALL CONSIDER AND MAKE PROVISIONS FOR FUTURE CONSTRUCTION.

Eichleay Engineers Inc. of California
1390 Willow Pass Road, Suite 600, Concord, Ca. 94520
(925) 689-7000 * FAX (925) 689-7006

A							AS-BUILT RECORD DWG PER CONC. RECORDS
REVISION	BY	CHK'D BY	APP'D BY	APP'D BY	DATE	DESCRIPTION	

BUILDING 6
OFFICE & LAB BUILD-OUT
FIRE ALARM LOGIC DIAGRAM #1

UNIVERSITY OF CALIFORNIA LAWRENCE BERKELEY LABORATORY
FACILITIES DEPARTMENT

DRAWN BY	DAS
DATE	11/19/96
REVIEWED BY	
APPROVED BY	
CAD FILE NAME	00013900
SCALE	NONE
DRAWING NO.	4B06E254A
SHEET	E92
PROJECT NO.	F08010