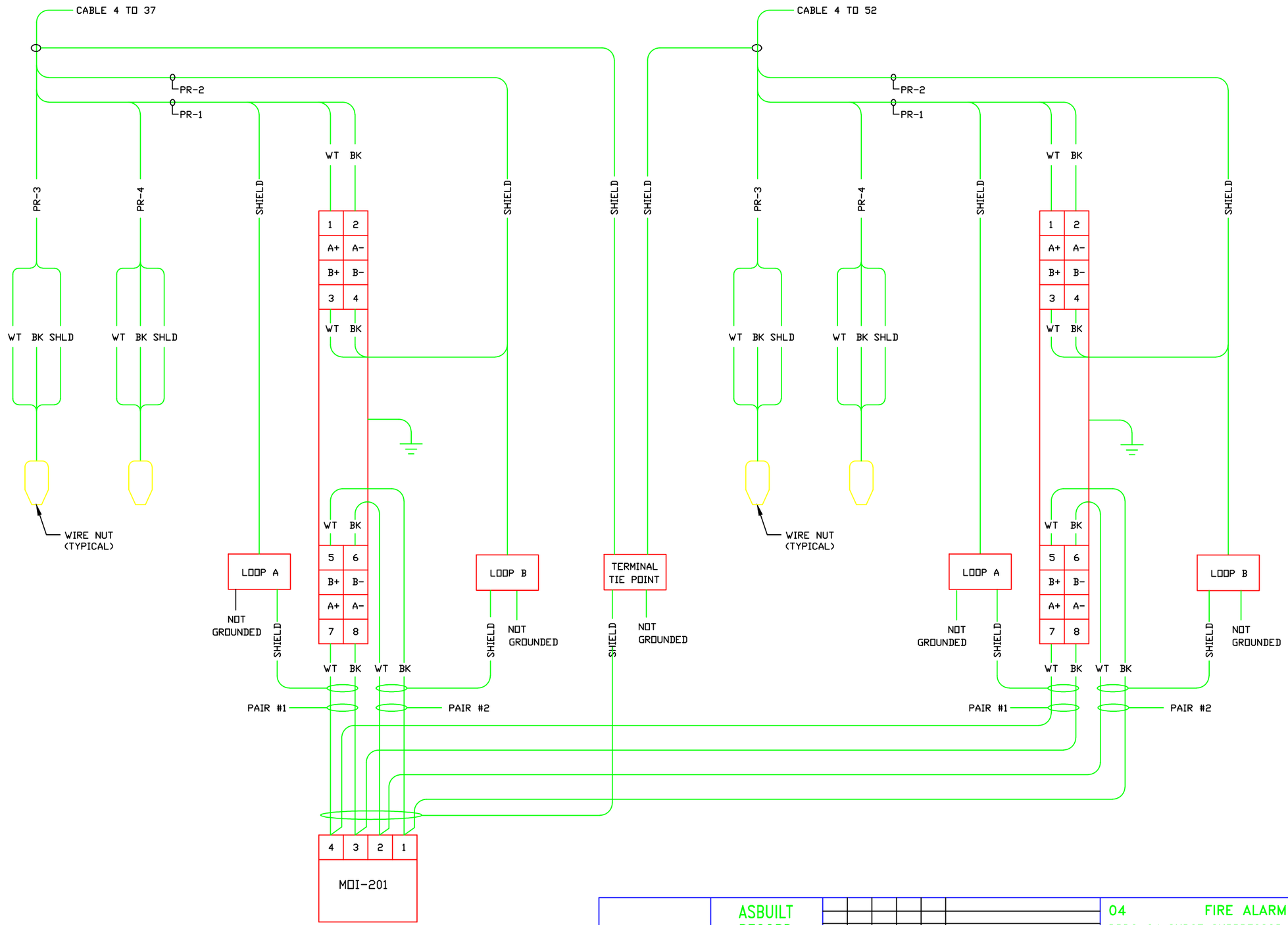

PROFESSIONAL SEAL (IF REVISION, APPLIES ONLY TO REVISED WORK)	ISSUE (PROGRESS, ESTIMATE, BID, CONSTRUCTION, CONFORMED, REVISION, RECORD)	REVISION NUMBER	DRAWN BY	CHECKED BY	APPR'D BY	DATE	REMARKS	
	ASBUILT RECORD 11/22/2006							

04 FIRE ALARM SYSTEM
DRDC-24 SURGE SUPPRESSOR
WIRING DIAGRAM

UNIVERSITY OF CALIFORNIA
LAWRENCE BERKELEY NATIONAL LABORATORY
FACILITIES DIVISION

DRAWN BY	AD	DATE 11/22/2006
CHECKED BY	LDD	11/22/2006
APPROVED BY	MCD	11/22/2006
CAD FILE PATH	00021627	
SCALE	As Noted	
DRAWING NO.	4B04E028	SHEET 1 OF 1
PROJECT NO.	FB4010	