NOTES:

1. WIRE #38 AND 41 ARE FROM THE 2ND FLOOR FCB'S.

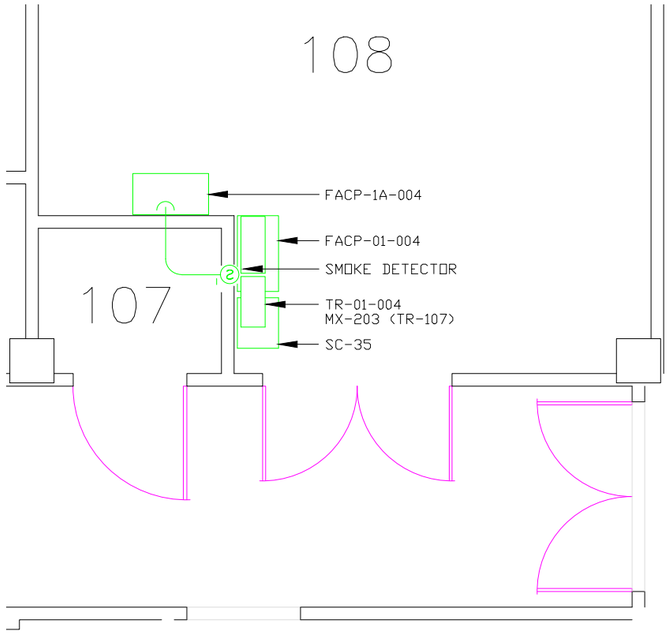

PARTIAL PLAN-ROOM 108

SCALE: 1/2"=1'-0"

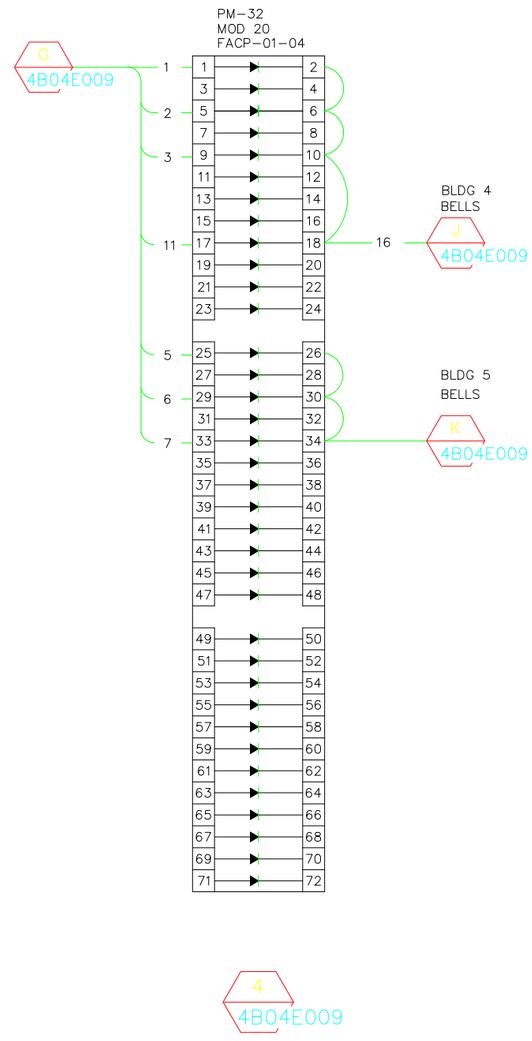

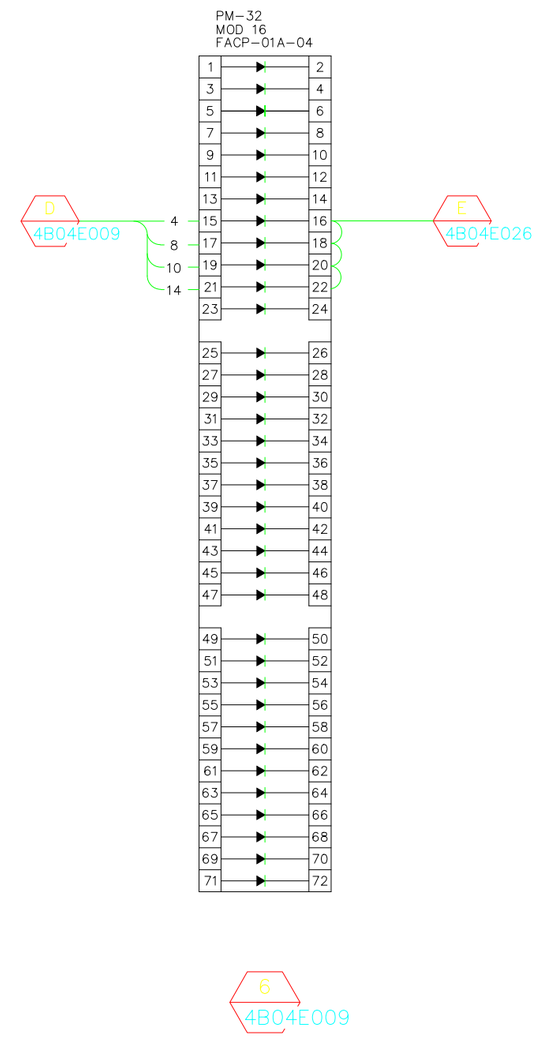

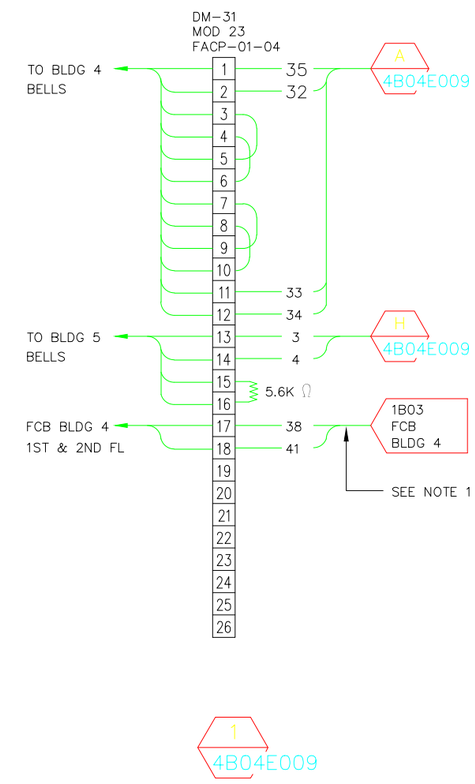

ASBUILT REVISION B 04/16/13	B	LDD	LDD	MCD	04/16/13	AS-BUILT PER FIELD VERIFICATION
	A	AD	LDD	MCD	11/08/06	AS-BUILT RECORD DRAWING, PER CONSTRUCTION MARKUP
PROFESSIONAL SEAL (IF REVISION, APPLIES ONLY TO REVISED WORK)	ISSUE (PROGRESS, ESTIMATE, BID, CONSTRUCTION, CONFORMED, REVISION, RECORD)	REVISION NUMBER	DRAWN BY	CHECKED BY	APPR'D BY	DATE	REMARKS

04 FIRE ALARM SYSTEM
PARTIAL PLAN, ROOM 108 AND
DM-31 AND PM-32 DETAILS

UNIVERSITY OF CALIFORNIA
LAWRENCE BERKELEY NATIONAL LABORATORY
FACILITIES DIVISION

DRAWN BY	MRC	DATE 8/9/2004
CHECKED BY	AD	8/9/2004
APPROVED BY	MCG	8/9/2004
CAD FILE PATH		
SCALE	As Noted	
DRAWING NO.	4B04E023B	SHEET
PROJECT NO.	FB4010	1 OF 1