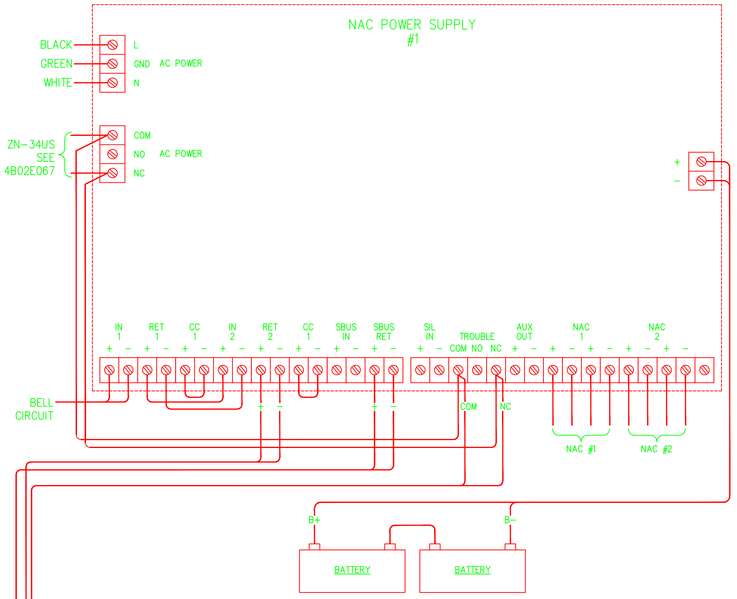

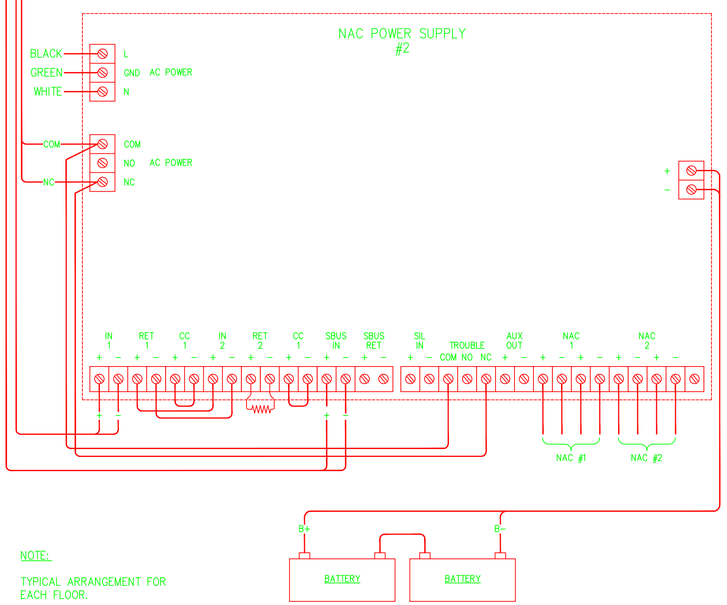

NOTE:

TYPICAL ARRANGEMENT FOR EACH FLOOR.

1 FA0.2 POWER SUPPLY PANEL DETAILS

SCALE: NONE

NOTIFICATION APPLIANCE CIRCUIT POWER REQUIREMENTS & VOLTAGE DROP CALCULATIONS

DESCRIPTION	CURRENT PER APPLIANCE	# OF APPLIANCES												
		CIRCUIT AV1	CIRCUIT AV2	CIRCUIT AV3	CIRCUIT AV4	CIRCUIT AV5	CIRCUIT AV6	CIRCUIT AV7	CIRCUIT AV8	CIRCUIT AV9	CIRCUIT AV10	CIRCUIT AV11	CIRCUIT AV12	CIRCUIT AV13
WHEELOCK EXCEEDER SERIES WALL STROBE 15 cd	0.057	0	0	0	0	2	2	2	1	2	0	0	3	1
WHEELOCK EXCEEDER SERIES WALL HORN/STROBE 15 cd	0.073	8	2	2	8	4	6	2	8	4	5	6	8	5
WHEELOCK EXCEEDER SERIES WALL STROBE 30 cd	0.085	0	1	0	0	1	0	0	1	0	1	0	1	0
WHEELOCK EXCEEDER SERIES WALL HORN/STROBE 30 cd	0.087	1	2	7	5	2	1	5	4	2	1	5	1	2
WHEELOCK EXCEEDER SERIES WALL STROBE 75 cd	0.135	1	3	1	0	0	1	0	0	0	0	0	1	0
WHEELOCK EXCEEDER SERIES WALL HORN/STROBE 75 cd	0.139	3	1	2	2	0	1	1	0	2	2	2	0	2
WHEELOCK EXCEEDER SERIES WALL STROBE 110 cd	0.182	0	0	0	0	0	0	0	0	0	0	0	0	0
WHEELOCK EXCEEDER SERIES WALL HORN/STROBE 110 cd	0.186	1	2	0	0	2	0	0	0	0	1	0	0	0
WHEELOCK EXCEEDER SERIES CEILING HORN/STROBE 30 cd	0.087	0	0	0	0	0	0	0	1	0	0	0	0	0
WHEELOCK EXCEEDER SERIES CEILING HORN/STROBE 75 cd	0.139	0	0	0	0	1	0	0	0	1	0	0	0	1
TOTAL CIRCUIT CURRENT		1.409	1.321	1.168	1.297	1.176	0.913	0.834	1.161	0.997	1.001	1.151	1.062	1.013

{(I) (D) (21.6)}/CM
WHERE: I = CIRCUIT POWER LOAD 21.64 = CONSTANT D = CONDUCTOR ONE WAY DISTANCE CM = CROSS SECTION AREA OF WIRE (6530 FOR AWG#12 AND 4110 FOR AWG#14)

AWG#12

NAC AV1: {(1.409 AMP)(550 FT)(21.64)}/6530 VOLTAGE DROP: 2.566 VOLTS AVAILABLE VOLTAGE: 21.434 VOLTS
NAC AV2: {(1.321 AMP)(550 FT)(21.64)}/6530 VOLTAGE DROP: 2.408 VOLTS AVAILABLE VOLTAGE: 21.592 VOLTS
NAC AV3: {(1.168 AMP)(550 FT)(21.64)}/6530 VOLTAGE DROP: 2.129 VOLTS AVAILABLE VOLTAGE: 21.871 VOLTS
NAC AV4: {(1.297 AMP)(500 FT)(21.64)}/6530 VOLTAGE DROP: 2.149 VOLTS AVAILABLE VOLTAGE: 21.851 VOLTS
NAC AV5: {(1.176 AMP)(500 FT)(21.64)}/6530 VOLTAGE DROP: 1.949 VOLTS AVAILABLE VOLTAGE: 22.051 VOLTS
NAC AV6: {(0.913 AMP)(600 FT)(21.64)}/6530 VOLTAGE DROP: 1.815 VOLTS AVAILABLE VOLTAGE: 22.185 VOLTS
NAC AV7: {(0.834 AMP)(600 FT)(21.64)}/6530 VOLTAGE DROP: 1.658 VOLTS AVAILABLE VOLTAGE: 22.342 VOLTS
NAC AV8: {(1.161 AMP)(500 FT)(21.64)}/6530 VOLTAGE DROP: 1.924 VOLTS AVAILABLE VOLTAGE: 22.076 VOLTS
NAC AV9: {(0.997 AMP)(600 FT)(21.64)}/6530 VOLTAGE DROP: 1.982 VOLTS AVAILABLE VOLTAGE: 22.018 VOLTS
NAC AV10: {(1.001 AMP)(600 FT)(21.64)}/6530 VOLTAGE DROP: 1.990 VOLTS AVAILABLE VOLTAGE: 22.010 VOLTS
NAC AV11: {(1.151 AMP)(500 FT)(21.64)}/6530 VOLTAGE DROP: 1.907 VOLTS AVAILABLE VOLTAGE: 22.093 VOLTS
NAC AV12: {(1.062 AMP)(600 FT)(21.64)}/6530 VOLTAGE DROP: 2.112 VOLTS AVAILABLE VOLTAGE: 21.888 VOLTS
NAC AV13: {(1.013 AMP)(600 FT)(21.64)}/6530 VOLTAGE DROP: 2.014 VOLTS AVAILABLE VOLTAGE: 21.986 VOLTS
THE CIRCUITS' AVAILABLE VOLTAGE IS ABOVE THE MINIMUM LISTED VOLTAGE FOR THE APPLIANCES.

AWG#14

NAC AV1: {(1.409 AMP)(550 FT)(21.64)}/4110 VOLTAGE DROP: 4.080 VOLTS AVAILABLE VOLTAGE: 19.920 VOLTS
NAC AV2: {(1.321 AMP)(550 FT)(21.64)}/4110 VOLTAGE DROP: 3.825 VOLTS AVAILABLE VOLTAGE: 20.175 VOLTS
NAC AV3: {(1.168 AMP)(550 FT)(21.64)}/4110 VOLTAGE DROP: 3.382 VOLTS AVAILABLE VOLTAGE: 20.618 VOLTS
NAC AV4: {(1.297 AMP)(500 FT)(21.64)}/4110 VOLTAGE DROP: 3.414 VOLTS AVAILABLE VOLTAGE: 20.586 VOLTS
NAC AV5: {(1.176 AMP)(500 FT)(21.64)}/4110 VOLTAGE DROP: 3.096 VOLTS AVAILABLE VOLTAGE: 20.904 VOLTS
NAC AV6: {(0.913 AMP)(600 FT)(21.64)}/4110 VOLTAGE DROP: 2.884 VOLTS AVAILABLE VOLTAGE: 21.116 VOLTS
NAC AV7: {(0.834 AMP)(600 FT)(21.64)}/4110 VOLTAGE DROP: 2.635 VOLTS AVAILABLE VOLTAGE: 21.365 VOLTS
NAC AV8: {(1.161 AMP)(500 FT)(21.64)}/4110 VOLTAGE DROP: 3.0561 VOLTS AVAILABLE VOLTAGE: 20.944 VOLTS
NAC AV9: {(0.997 AMP)(600 FT)(21.64)}/4110 VOLTAGE DROP: 3.150 VOLTS AVAILABLE VOLTAGE: 20.850 VOLTS
NAC AV10: {(1.001 AMP)(600 FT)(21.64)}/4110 VOLTAGE DROP: 3.1621 VOLTS AVAILABLE VOLTAGE: 20.838 VOLTS
NAC AV11: {(1.151 AMP)(500 FT)(21.64)}/4110 VOLTAGE DROP: 3.030 VOLTS AVAILABLE VOLTAGE: 20.970 VOLTS
NAC AV12: {(1.062 AMP)(600 FT)(21.64)}/4110 VOLTAGE DROP: 3.355 VOLTS AVAILABLE VOLTAGE: 20.645 VOLTS
NAC AV13: {(1.013 AMP)(600 FT)(21.64)}/4110 VOLTAGE DROP: 3.200 VOLTS AVAILABLE VOLTAGE: 20.800 VOLTS
THE CIRCUITS' AVAILABLE VOLTAGE IS ABOVE THE MINIMUM LISTED VOLTAGE FOR THE APPLIANCES.

NOTES:

1. COPER NOTIFICATION, WHEELOCK EXCEEDER STROBES AND HORN/STROBES WERE USED IN THE DESIGN. THE USE OF OTHER APPLIANCES SHALL REQUIRE NEW VOLTAGE DROP CALCULATIONS TO DEMONSTRATE THE ADEQUACY OF DESIGN.
2. ALL HORN/STROBES SHALL HAVE THEIR HORN SET FOR 95dBA.
3. THE CIRCUIT VOLTAGE DROP CALCULATIONS HAVE BEEN DETERMINED TO PROVIDE SPARE CAPACITY FOR FUTURE MODIFICATIONS IN ACCORDANCE WITH LBNL REQUIREMENTS.

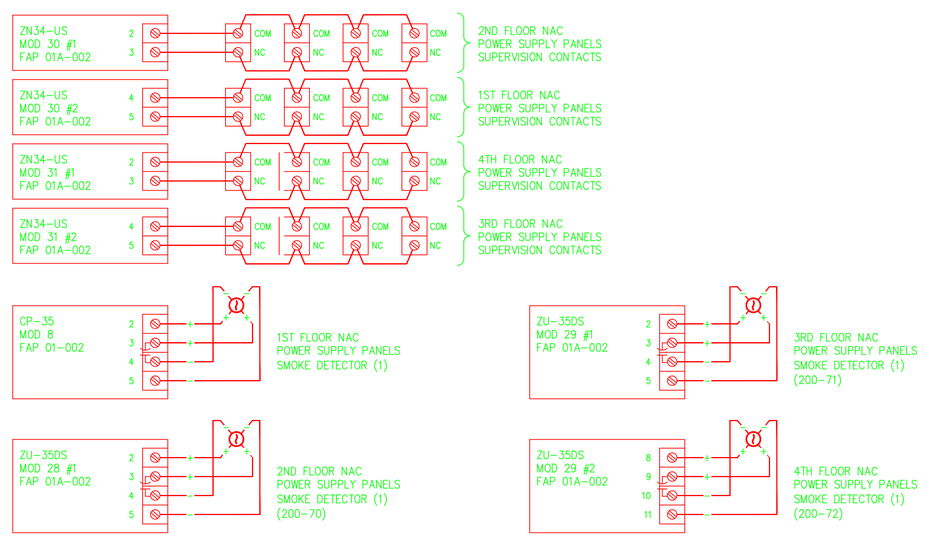

2 FA0.2 INITIATION CIRCUIT RISER DIAGRAMS

SCALE: NONE

LEGEND

- AV 15 cd — NEW WALL MOUNTED NOTIFICATION APPLIANCE (HORN/STROBE).
- CM S 15 cd — NEW WALL MOUNTED NOTIFICATION APPLIANCE (STROBE).
- AV — NEW CEILING MOUNTED NOTIFICATION APPLIANCE (HORN/STROBE).
- NEW PHOTOELECTRIC SMOKE DETECTOR.
- PWR — NEW NOTIFICATION APPLIANCE CIRCUIT POWER PANEL.
- FAP — EXISTING FIRE ALARM CONTROL UNIT.
- NEW ¾ INCH FIRE ALARM CONDUIT.

CONDUCTOR IDENTIFICATION LEGEND

AV1 1 PAIR #14 NOTIFICATION APPLIANCE CIRCUIT CONDUCTORS (CKT AV1).
2-AV1 2 PAIR #14 NOTIFICATION APPLIANCE CIRCUIT CONDUCTORS (CKT AV1).
BROWN & ORANGE (STROBE); BLACK & WHITE (HORN)

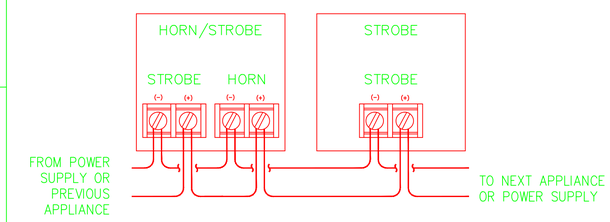

3 FA0.2 APPLIANCE WIRINGL DETAILS

SCALE: NONE

SUBMITTED BY THE VENDOR AS DWG# 4B02E240A

A	HYT	HYT	–	12/17/10	COMMENTS & EXCEEDER APPLIANCES
REVISION NUMBER	DRAWN BY	CHECKED BY	APPR'D BY	DATE	REMARKS

CONSULTING FIRM

PROFESSIONAL SEAL (IF REVISION, APPLIES ONLY TO REVISED WORK)

RECORD DRAWING

08/26/11

ISSUE (PROGRESS, ESTIMATE, BID, CONSTRUCTION, CONFORMED, REVISION, RECORD)

02

FIRE ALARM SYSTEM – NOTIFICATION APPLIANCES NOTES, DETAILS & VOLTAGE DROP CALCULATIONS

UNIVERSITY OF CALIFORNIA
LAWRENCE BERKELEY NATIONAL LABORATORY
FACILITIES DIVISION

DRAWN BY DWH	DATE
CHECKED BY BBT	06/12/09
APPROVED BY	–
CAD FILE PATH	
SCALE AS NOTED	
DRAWING NO. 4B02E247_	SHEET FA0.2
PROJECT NO. WAD263	