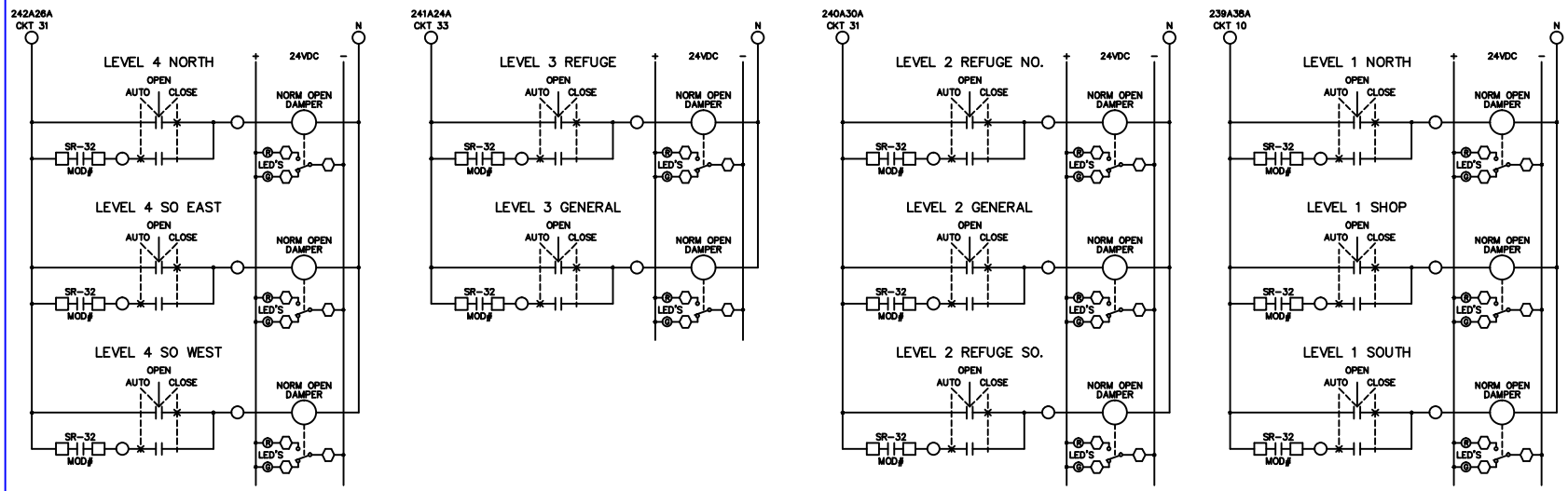

DAMPER MICRO SWITCH TERMINAL

30 FIRE ALARM TERMINAL

120VAC TERMINAL

R RED LED – DAMPER CLOSED

G GREEN LED – DAMPER OPEN

REVISION NUMBER	DRAWN BY	CHECKED BY	APPR'D BY	DATE	REMARKS
C	RD			2/7/94	REMOVE ELEVATOR DAMPER CONTROL–AS BUILT
B	RD	RMD	RMD	12/11/93	REDRAWN IN AUTOCAD, ADD ELEVATOR DAMPER CONTROL
A	RD	RMD	RMD	3/11/93	MODIFIED FREEMAN'S DAMPER CONTROL

BUILDING 2 AML
SMOKE CONTROL PANEL NO. 1
PANEL WIRING

UNIVERSITY OF CALIFORNIA LAWRENCE BERKELEY LABORATORY
FACILITIES DEPARTMENT

DRAWN BY	L. REHBOCK	DATE 3/4/93
CHECKED BY	R. GRAZIER	3/4/93
APPROVED BY	R. GLEASON	3/4/93
CAD FILE NO.	GK\ELECT\FA\02\2E071C	
SCALE	NONE	
DRAWING NO.	4B02E071C	SHEET E5
PROJECT NO.	000000	8 OF 8