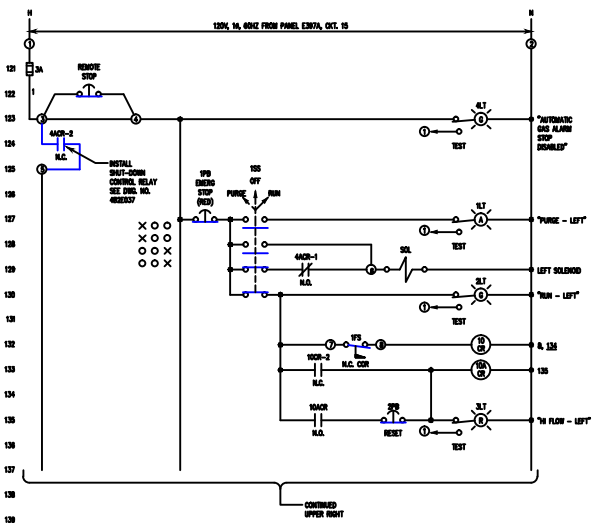

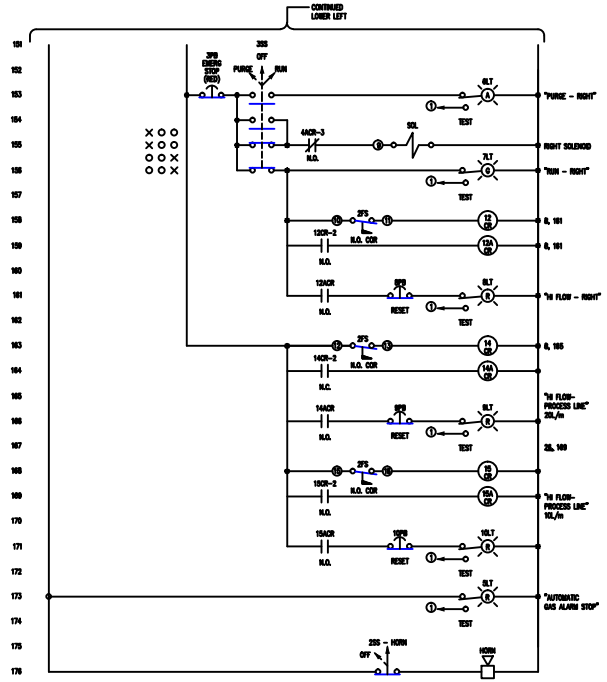

FAULT RESPONSE

BUILDING 2 GERMANIUM LABORATORY
ROOM 260A HYDROGEN ALARM MATRIX

RESPONSE / FAULT	FIRE HOUSE		LOCAL AUDIO ALARMS			GAS CABINET SHUTDOWN
	H2 ALARM	SUPV ALARM	SONIC ALERT ROOM 260A	H2 GAS CABINET HORN	H2 MONITOR BUZZER IN MDA IN HALLWAY	
H2 MONITOR LEVEL 1			X		X	
H2 MONITOR LEVEL 2	X		X	X	X	X
EXHAUST PROVING SWITCH			X	X	X	X
MDA MONITOR FAILURE OR LOSS OF COVERAGE		X	X	X	X	X
MDA MONITOR POWER LOSS		X	X	X	X	X
EXCESS H2 FLOW GAS CABINET 1FS, 2FS			X	X	X	X
EXCESS H2 FLOW GAS CABINET 3FS, 20L/M			X	X	X	X
EXCESS H2 FLOW GAS CABINET 4FS, 10L/M			X		X	

LEGEND

LVP1	Level 1 Point 1 Alarm Contact
DE	De-energized
N.O.	Normally Open
N.C.	Normally Closed
COR	Open on Rise
CCR	CLOSE on Rise

REFERENCE DWG.:

4B2E037 H2 GAS DETECTION & MDA INSTALLATION CONTROL WIRING DIAGRAMS – SHEET 1

HYDROGEN (H2) GAS CABINET CONTROL ELEMENTARY DIAGRAM

PROJ. NO. 000000

A	AS BUILT REDRAWN ON AUTOCAD		

BLDG. 2 GERMANIUM LAB – ROOM 260A
H2 GAS DETECTOR & MDA INSTALLATION
CONTROL WIRING DIAGRAMS
SHEET 2

UNIVERSITY OF CALIFORNIA LAWRENCE BERKELEY LABORATORY
FACILITIES DEPARTMENT

LS Rehbock	9-22-92
PM Chan	9-22-92
RM Gleason	9-23-92
NONE	
4B02E038A	E3
	3