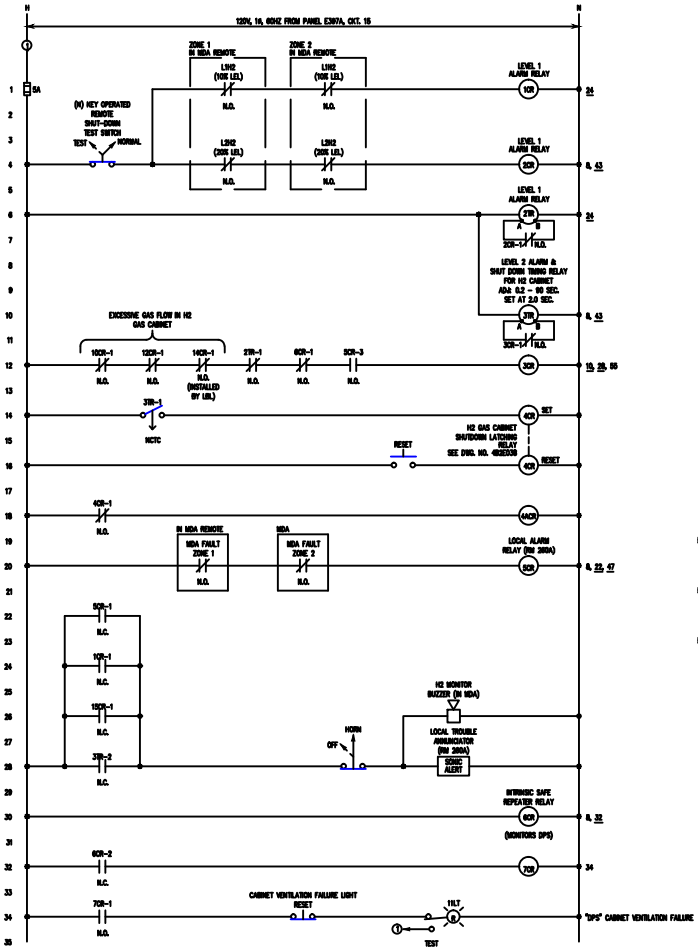

AUTOMATIC SHUT-DOWN CONTROL CABINET ELEMENTARY DIAGRAM

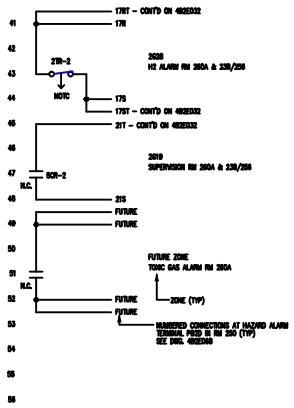

FIRE ALARM CONTROL PANEL WIRING

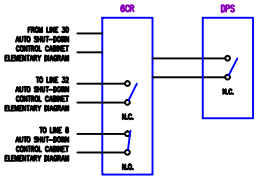

INTRINSIC SAFE REPEATER RELAY WIRING

REFERENCE DWG.:

4B2E038 H2 GAS DETECTION & MDA INSTALLATION CONTROL WIRING DIAGRAMS SHEET 2

BLDG. 2 GERMANIUM LAB - ROOM 260A

NOTES

1. Contacts are shown in Normal Operating State (Energized, with Main Power on).
2. Intrinsic Safe Repeater Relay, STAHL, 9225, 120VAC, 1 STEP. Mount Relay in Automatic Shut-Down Relay Cabinet. Separate Wires from Relay to DPS from other Cabinet Wiring by 2 Inches, minimum.

ALARM SYSTEM DESCRIPTION

I. Test Switch on the Automatic Shut-Down Relay Cabinet:
   - A. This is a key operated switch. When it is opened, it deactivates both the level 1 (10%) and level 2 (20%) alarm relays. When this switch is closed, the entire System can then be placed back in service.

II. On Activation of Level 1 relay Monitor low level relay (10% LEL) from the Sieger RAD 80:
   - A. Local annunciation in room 260A via Sonic Alert.
   - B. Annunciation in hallway via a buzzer in the MDA & Sieger RAD 80.

III. On Activation of Level 2 relay (20%LEL) from the Sieger RAD 80:
   - A. Shut down of the gas cabinet via 4CR relay. Local annunciation in room 260A, via a horn on the hydrogen cabinet.
   - B. Local annunciation in room 260A via Sonic Alert.
   - C. On the MDA, the level 2 Alarm LED lights all indicate RED at the sample point or points where hydrogen gas is being detected & annunciation outside doorways of Room 260A via buzzer in MDA/Sieger.
   - D. Report to the Fire House, after a 2 second time delay, as a level 2 hydrogen gas release alarm via Bldg. 2 Pyrotronics Fire Alarm Control Panel, Zone 3F27, Transmitter 23Z.
   - E. Open Inert Gas Purge Valves.

IV. On Activation of Differential Pressure Switch (DPS) due to loss of gas cabinet ventilation:
   - A. Shut down of the gas cabinet via 4CR relay. Local annunciation in room 260A, via a horn on the hydrogen cabinet.
   - B. Local annunciation in room 260A via Sonic Alert.
   - C. A Red Alert Lamp Indicating Exhaust Failure (DPS Activation) will light up on the Automatic Shutdown control Cabinet.
   - D. A Red Alarm Light Indicating "Automatic Gas Alarm Stop" will light up on the Gas Cabinet.

V. On Activation of the MDA Loss of Monitoring or Loss of Coverage:
   - A. Local Alarm via 5CR Relay.
   - B. Local annunciation in room 260A via Sonic Alert.
   - C. Report to the Fire House as a supervision alarm via Bldg. 2 Pyrotronics Fire Alarm Control Panel, Zone 3S19, Transmitter23B.
   - D. Shut down of the gas cabinet via 4CR relay. Local annunciation in room 260A, via a horn on the hydrogen cabinet.

VI. On Activation of MDA, Maintenance or Analyzer 1 relays:
   - A. Local annunciation in room 260A via Sonic Alert.

VII. On Activation of MDA Power Loss
   - A. Local Alarm via 5CR Relay.
   - B. Local annunciation in room 260A via Sonic Alert.
   - C. Report to the Fire House as a supervision alarm via Bldg. 2 Pyrotronics Fire Alarm Control Panel, Zone 3S19, Transmitter23B.
   - D. Shut down of the gas cabinet via 4CR relay. Local annunciation in room 260A, via a horn on the hydrogen cabinet.

VIII. On Activation of Flow Switch 1FS, 2FS or 3FS:
   - A. Its corresponding Alert Light on the Gas Cabinet will light up.
   - B. Shut down of the gas cabinet via 4CR Relay. Local annunciation in room 260A, via a horn on the hydrogen cabinet.
   - C. Local annunciation in room 260A via Sonic Alert.

IX. On Activation of Flow Switch 4FS:
   - A. Local annunciation in room 260A via Sonic Alert.
   - B. Light up HLT on the Gas Cabinet.

LEGEND

L1H2	Level 1 Hydrogen (10% LEL)	N.O.	Normally Open (Denotes Shelf State)
L2H2	Level 2 Hydrogen (20% LEL)	N.C.	Normally Closed (Denotes Shelf State)
LEL	Lower Explosive Limit	DPS	Differential Pressure Switch
DE	De-energized	FS	Flow Switch

PROJ. NO. 000000

A	AS-BUILT REDRAWN ON AUTOCAD		

BLDG. 2 GERMANIUM LAB - ROOM 260A

H2 GAS DETECTOR & MDA INSTALLATION CONTROL WIRING DIAGRAMS

SHEET 1

UNIVERSITY OF CALIFORNIA LAWRENCE BERKELEY LABORATORY

FACILITIES DEPARTMENT

LS Rehbock	9-23-92
PM Chan	9-23-92
RM Gleason	9-23-92
NONE	
4B02E037A	E1
	2