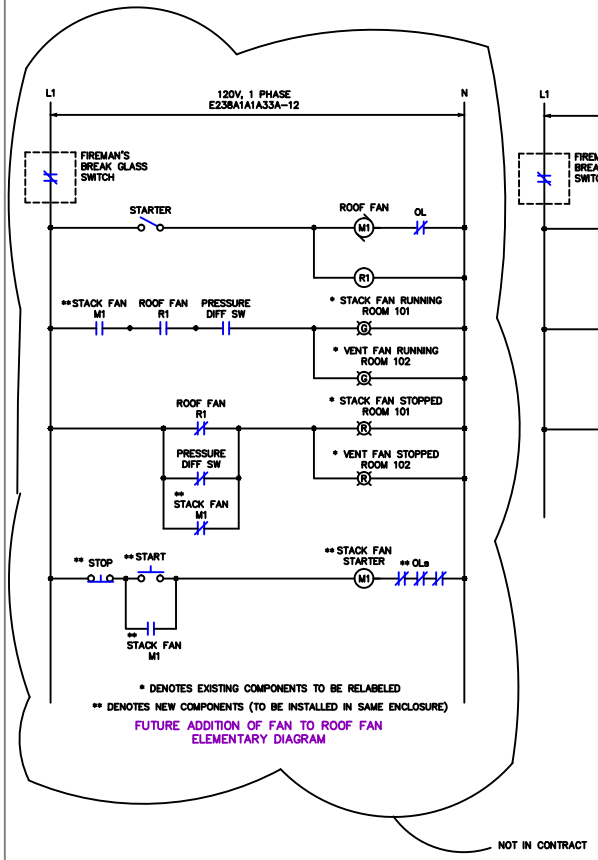

FUTURE ADDITION OF FAN TO ROOF FAN
ELEMENTARY DIAGRAM

NOT IN CONTRACT

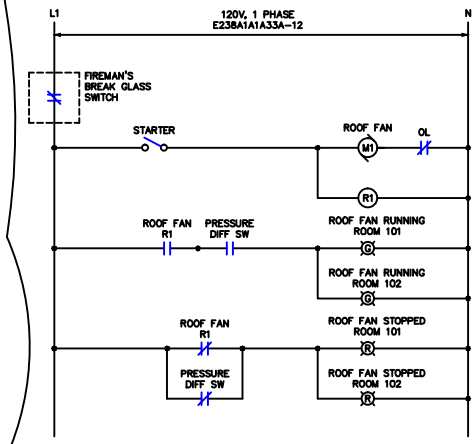

ROOF FAN
ELEMENTARY DIAGRAM

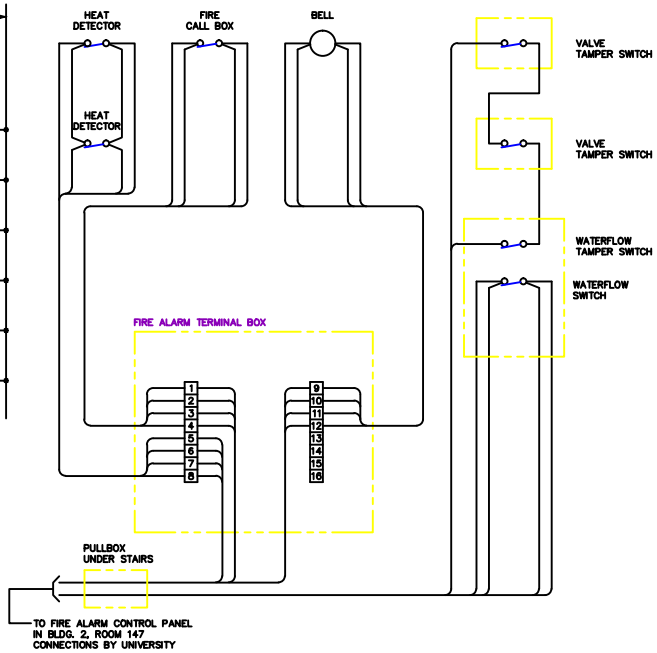

FIRE ALARM
INTERCONNECTION DIAGRAM

4B02AE001 POWER & LIGHTING & GROUNDING PLAN & ELEVATIONS

PROJ. NO. 000000

2						
1	PC	RB	RB	4-28-93	ISSUED FOR BID SCOPE CHANGE	

BLDG. 2A HAZARDOUS MATERIALS STORAGE BLDG.

FIRE ALARM INTERCONNECTION DIAG & EXHAUST FANS CONTROL AND INDICATION ELEMENTARY DIAGRAM

UNIVERSITY OF CALIFORNIA LAWRENCE BERKELEY LABORATORY

FACILITIES DEPARTMENT

LS REHBOCK	6-23-93
R. GLEASON	6-23-93
R. GLEASON	6-23-93
NONE	

4B02AE002-2

E2

2