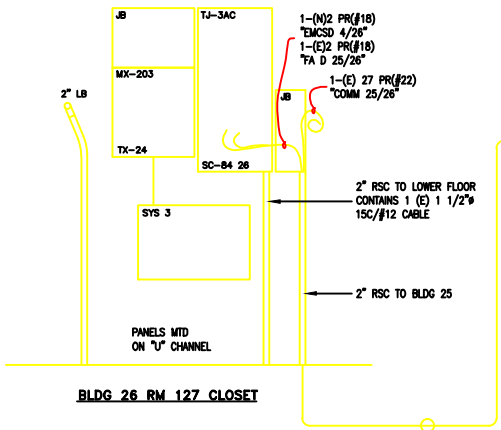

BLDG 26 RM 127 CLOSET

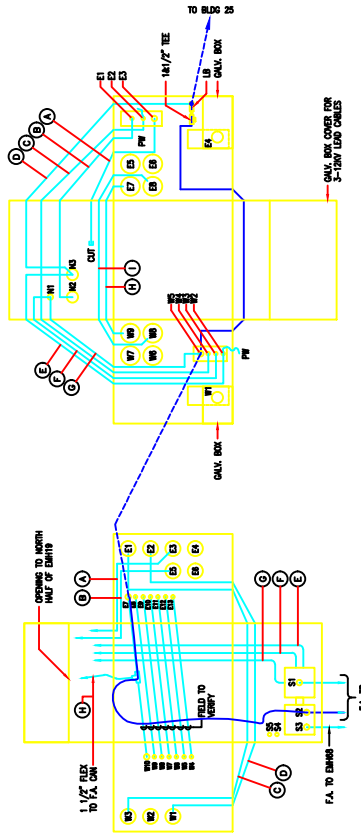

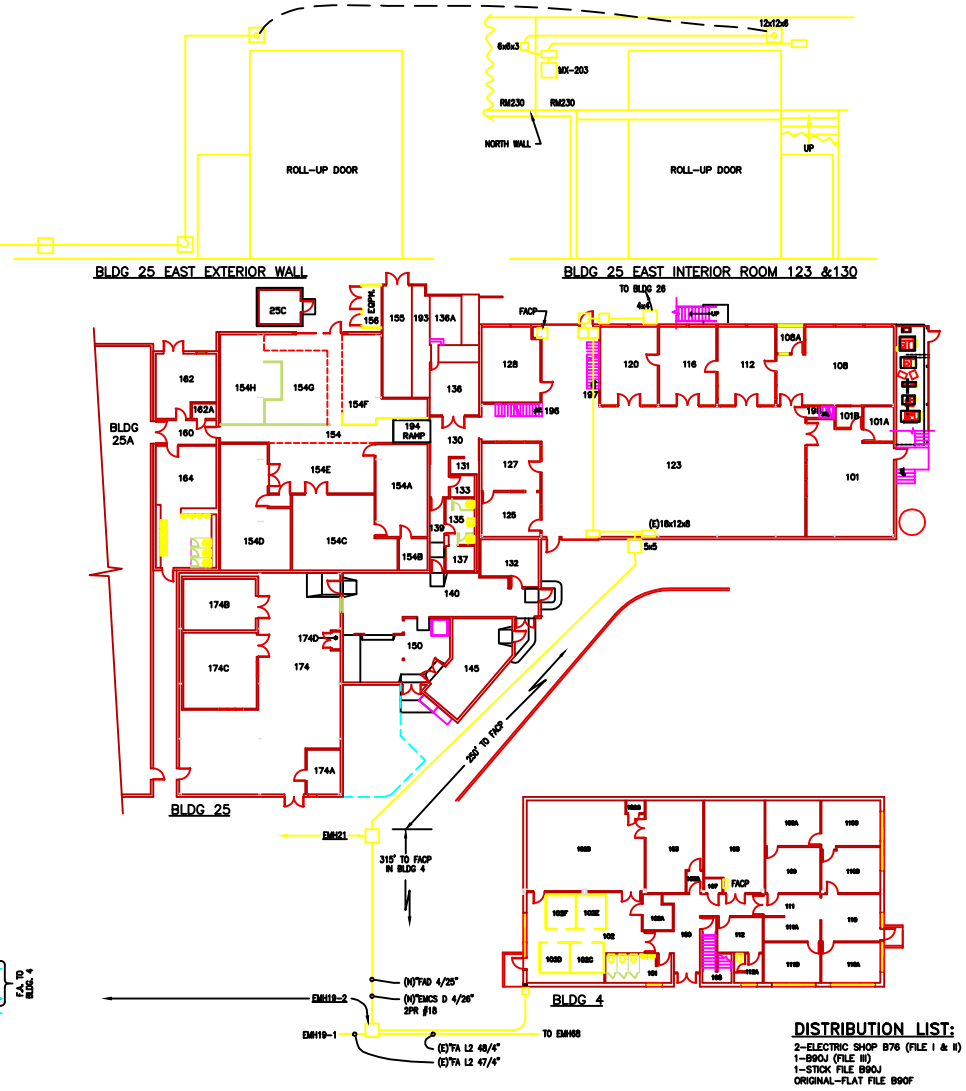

DISTRIBUTION LIST:

2-ELECTRIC SHOP B76 (FILE I & II)
1-B90J (FILE III)
1-STICK FILE B90J
ORIGINAL-FLAT FILE B90F

REVISION NUMBER	DRAWN BY	CHECKED BY	APPR'D BY	DATE	REMARKS
B	FWD	MCG	MCG	2/25/99	AS BUILT
A	RG		BMG	10/19/88	EMCS DROP TO BLDG 37 FROM 46

00 SITEWIDE
FIRE ALARM, EMCS & COMM SYS
CABLE PLANT LAYOUT

UNIVERSITY OF CALIFORNIA
LAWRENCE BERKELEY NATIONAL LABORATORY
FACILITIES DEPARTMENT

DRAWN BY	JBR	02/01/83
CHECKED BY	RG	04/12/83
APPROVED BY	RB	04/12/83
CAD FILE PATH	00008274	
SCALE	As Noted	
DRAWING NO.	4B00E245B	SHEET 1 OF 1
PROJECT NO.	FA8021	