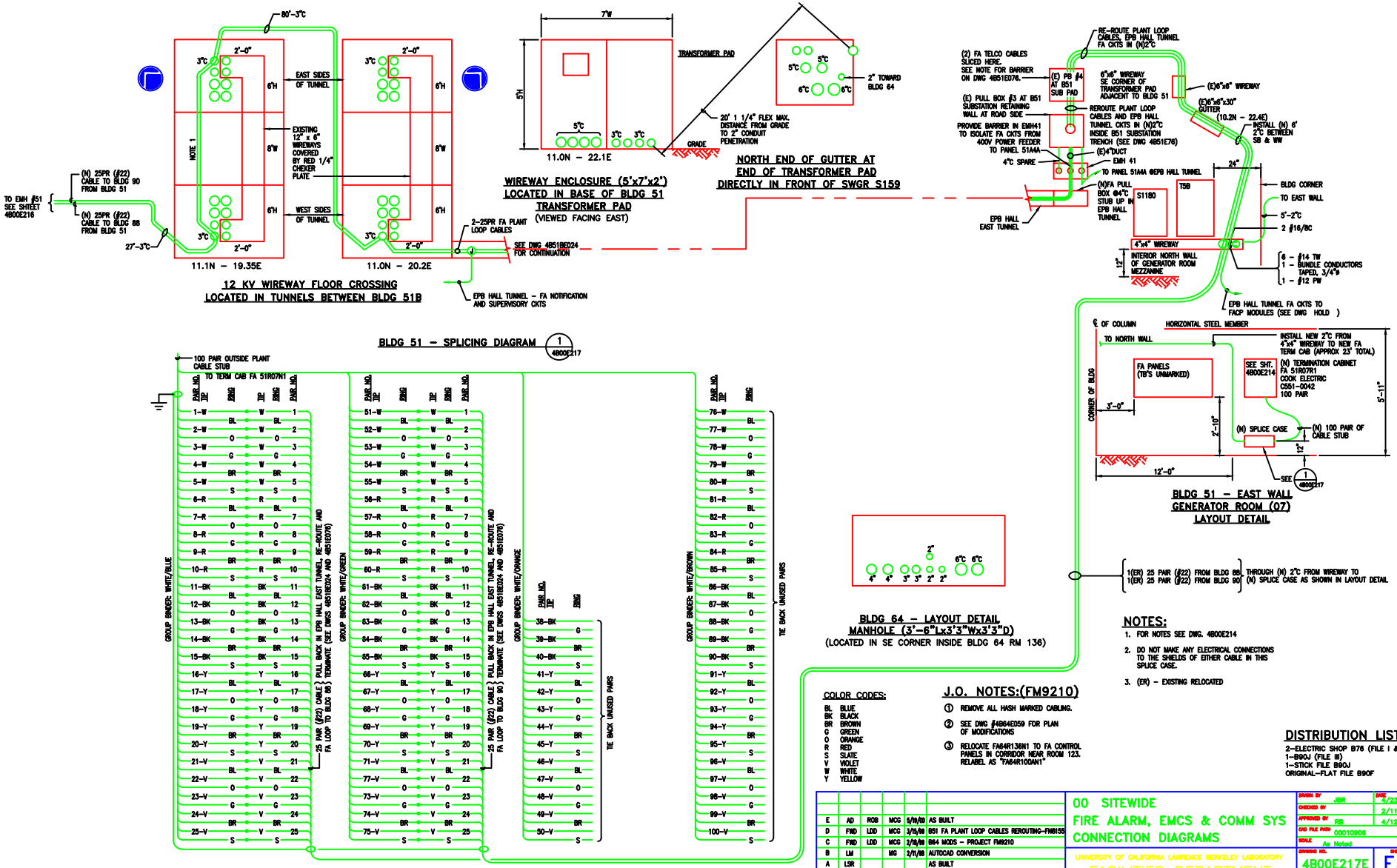
12 KV WIREWAY FLOOR CROSSING
LOCATED IN TUNNELS BETWEEN BLDG 51B
11.1N – 19.35E
11.0N – 20.2E
EAST SIDES OF TUNNEL
WEST SIDES OF TUNNEL
EXISTING 12" x 6" WIREWAYS COVERED BY RED 1/4" CHECKER PLATE
(N) 25PR (#22) CABLE TO BLDG 90 FROM BLDG 51
(N) 25PR (#22) CABLE TO BLDG 88 FROM BLDG 51
TO EMH #51 SEE SHTEET 4B00E216
2-25PR FA PLANT LOOP CABLES
SEE DWG 4B51BE024 FOR CONTINUATION
EPB HALL TUNNEL – FA NOTIFICATION AND SUPERVISORY CKTS
WIREWAY ENCLOSURE (5'x7'x2')
LOCATED IN BASE OF BLDG 51
TRANSFORMER PAD
(VIEWED FACING EAST)
11.0N – 22.1E
TRANSFORMER PAD
GRADE
20' 1 1/4" FLEX MAX. DISTANCE FROM GRADE TO 2" CONDUIT PENETRATION
2" TOWARD BLDG 64
NORTH END OF GUTTER AT
END OF TRANSFORMER PAD
DIRECTLY IN FRONT OF SWGR S159
(2) FA TELCO CABLES SLICED HERE. SEE NOTE FOR BARRIER ON DWG 4B51E078.
(E) PB #4 AT B51 SUB PAD
(E) PULL BOX #3 AT B51 SUBSTATION RETAINING WALL AT ROAD SIDE
PROVIDE BARRIER IN EMH41 TO ISOLATE FA CKTS FROM 400V POWER FEEDER TO PANEL 51AA
RE-ROUTE PLANT LOOP CABLES, EPB HALL TUNNEL FA CKTS IN (N)2"C
6"x6" WIREWAY SE CORNER OF TRANSFORMER PAD ADJACENT TO BLDG 51
(E)6"x6" WIREWAY
(E)6"x6"x30" GUTTER (10.2N – 22.4E)
REROUTE PLANT LOOP CABLES AND EPB HALL TUNNEL CKTS IN (N)2"C INSIDE B51 SUBSTATION TRENCH (SEE DWG 4B51E76)
INSTALL (N) 6' 2"C BETWEEN SB & WW
(E)4"DUCT
4"C SPARE
EMH 41
TO PANEL 51AA @EPB HALL TUNNEL
(N)FA PULL BOX @4"C STUB UP IN EPB HALL TUNNEL
EPB HALL EAST TUNNEL
S1180
T5B
BLDG CORNER
TO EAST WALL
5'-2"C
2 #16/8C
4"x4" WIREWAY
INTERIOR NORTH WALL OF GENERATOR ROOM MEZZANINE
6 – #14 TW
1 – BUNDLE CONDUCTORS TAPED, 3/4"Ø
1 – #12 PW
EPB HALL TUNNEL FA CKTS TO FACP MODULES (SEE DWG HOLD)
BLDG 51 – SPLICING DIAGRAM
100 PAIR OUTSIDE PLANT CABLE STUB
TO TERM CAB FA 51R07N1
GROUP BINDER: WHITE/BLUE
GROUP BINDER: WHITE/GREEN
GROUP BINDER: WHITE/ORANGE
GROUP BINDER: WHITE/BROWN
25 PAIR (#22) CABLE PULL BACK IN EPB HALL EAST TUNNEL, RE-ROUTE AND TERMINATE (SEE DWGS 4B51BE024 AND 4B51E076)
TIE BACK UNUSED PAIRS
BLDG 64 – LAYOUT DETAIL
MANHOLE (3'-6"Lx3'3"Wx3'3"D)
(LOCATED IN SE CORNER INSIDE BLDG 64 RM 136)
℄ OF COLUMN
HORIZONTAL STEEL MEMBER
TO NORTH WALL
INSTALL NEW 2"C FROM 4"x4" WIREWAY TO NEW FA TERM CAB (APPROX 23' TOTAL)
FA PANELS (TB'S UNMARKED)
SEE SHT. 4B00E214
(N) TERMINATION CABINET FA 51R07R1 COOK ELECTRIC C551-0042 100 PAIR
(N) SPLICE CASE
(N) 100 PAIR OF CABLE STUB
CORNER OF BLDG
3'-0"
2'-10"
5'-11"
12'-0"
SEE 4B00E217
BLDG 51 – EAST WALL
GENERATOR ROOM (07)
LAYOUT DETAIL
1(ER) 25 PAIR (#22) FROM BLDG 88
1(ER) 25 PAIR (#22) FROM BLDG 90
THROUGH (N) 2"C FROM WIREWAY TO (N) SPLICE CASE AS SHOWN IN LAYOUT DETAIL
NOTES:
1. FOR NOTES SEE DWG. 4B00E214
2. DO NOT MAKE ANY ELECTRICAL CONNECTIONS TO THE SHIELDS OF EITHER CABLE IN THIS SPLICE CASE.
3. (ER) – EXISTING RELOCATED
COLOR CODES:
BL BLUE
BK BLACK
BR BROWN
G GREEN
O ORANGE
R RED
S SLATE
V VIOLET
W WHITE
Y YELLOW
J.O. NOTES:(FM9210)
① REMOVE ALL HASH MARKED CABLING.
② SEE DWG #4B64E059 FOR PLAN OF MODIFICATIONS
③ RELOCATE FA64R136N1 TO FA CONTROL PANELS IN CORRIDOR NEAR ROOM 123. RELABEL AS "FA64R100AN1"
DISTRIBUTION LIST:
2–ELECTRIC SHOP B76 (FILE I & II)
1–B90J (FILE III)
1–STICK FILE B90J
ORIGINAL–FLAT FILE B90F
E AD ROB MCG 5/19/99 AS BUILT
D FMD LDD MCG 3/15/99 B51 FA PLANT LOOP CABLES REROUTING–FM8155
C FMD LDD MCG 2/18/99 B64 MODS – PROJECT FM9210
B LM MG 2/11/99 AUTOCAD CONVERSION
A LSR AS BUILT
REVISION NUMBER DRAWN BY CHECKED BY APPR'D BY DATE REMARKS
00 SITEWIDE
FIRE ALARM, EMCS & COMM SYS
CONNECTION DIAGRAMS
UNIVERSITY OF CALIFORNIA LAWRENCE BERKELEY LABORATORY
FACILITIES DEPARTMENT
DRAWN BY JBR DATE 4/23/1982
CHECKED BY 2/11/1983
APPROVED BY RB 4/12/1983
CAD FILE PATH 00010906
SCALE As Noted
DRAWING NO. 4B00E217E
SHEET E4
PROJECT NO. FM8155