Drawing: D:\DOSPROJ\9292\SPROJDOC\3-03_CD\3-03B_WD\50_A202.DWG May 11, 1994 9:20:03 a.m.
Xrefs: X50CRIT.DWG 50-3.DWG 50-2.DWG 50-1.DWG

FIRE ALARM LOGIC DIAGRAM

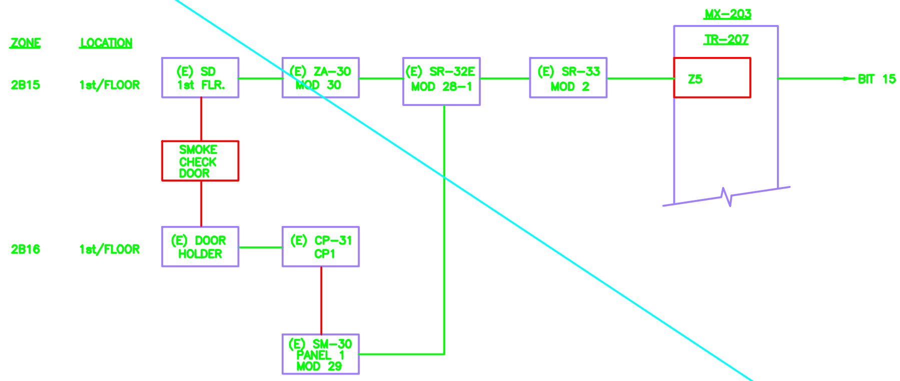

SYSTEM 3 WIRING DIAGRAM

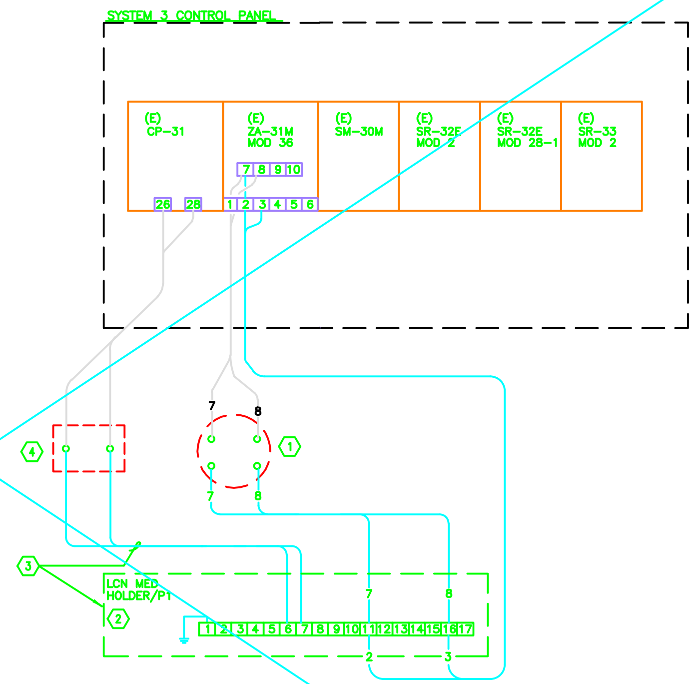

1
50E-E2.2
FIRE ALARM WIRING DIAGRAM

SHEET NOTES

1. EXISTING SMOKE DETECTOR IN ALCOVE. REMOVE AND EXTEND CKT 2B15 TO DOOR HOLDER.
2. NOT USED
3. NOT USED
4. (E) DOOR HOLDER. EXTEND CIRCUIT AS NOTED.

ess ARCHITECTS
466 Eighth Street
San Francisco, CA 94103
415 252-9500
415 252-1585 Fax

CONSULTANT
MAZZETTI & ASSOCIATES, INC.
Consulting Mechanical & Electrical Engineers
1000 BRANNAN STREET – SAN FRANCISCO, CA 94103-4871
TELEPHONE (415) 864-5889 FAX (415) 864-4363
621-293

REVISIONS

no.	date description
A	90% TITLE II 9/26/94
B	100% TITLE II 11/7/94
C	FINAL TITLE II 2/13/95
D	REISSUE FINAL TITLE II 3/30/95
E	FIRE ALARM SCHEMATICS REV. 1 7/7/95
F	FIRE AND LIFE SAFETY 9/20/95
G	VOIDED, SEE DWG. 4B50AE044, 4B50AE050 AND 4B50AE051, AS BUILT 7/25/97

JOB TITLE

FIRE AND SAFETY SYSTEMS UPGRADE
PHASE I
LAWRENCE BERKELEY LABORATORY, UNIVERSITY OF CALIFORNIA
BERKELEY, CALIFORNIA

KEY PLAN

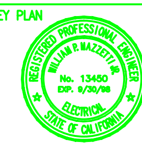

ESS ARCHITECTS JOB #: 9292
LBL SC#: 728
LBL FILE DRAWING: *
ACAD FILE NAME:
LBNL DWG. 3N50EE024G
PROJ # 120257

SHEET TITLE:
BUILDING 50
FIRE ALARM LOGIC
& WIRING DIAGRAM

SCALE: AS NOTED
DATE: 7/7/95

SHEET:
50E-E2.2G